TABLE OF CONTENTS

SECTION 1 GENERAL REQUIREMENTS

1.1 Subdivision Approval Path Checklist 1-1
1.2 Subdivision Concept Plan Checklist 1-4
1.3 Subdivision Preliminary Plat Checklist 1-5
1.4 Subdivision Final Plat Checklist 1-11
1.5 Construction Phase 1-17
1.6 Recording 1-17
1.7 Security Recording 1-17
1.8 Minimum Improvement Requirements 1-18
1.9 Water Shares 1-21
1.10 U.D.O.T. 1-21
1.11 Wetlands 1-21

SECTION 2 HYRUM CITY DESIGN STANDARDS AND CONSTRUCTION SPECIFICATIONS FOR PUBLIC WORKS

2.1 General Requirements 2-1
2.2 Definitions 2-1
2.3 Revisions of Standards and Specifications 2-4
2.4 Contractors 2-5

SECTION 3 HYRUM CITY GENERAL IMPROVEMENT REQUIREMENTS AND DESIGN GUIDELINES

3.1 Scope 3-1
3.2 Construction Drawings 3-1
3.3 Standards for Final Construction Drawings 3-1
3.4 Revisions 3-1
3.5 Required Information 3-1
3.6 Additional Information 3-3
3.7 Inspection 3-4
3.8 Construction-Completion Inspection 3-4
3.9 Two-Year Correction Period 3-4
3.10 Required Improvements 3-5

SECTION 4 HYRUM CITY GENERAL REQUIREMENTS AND SPECIFICATIONS FOR SITE WORK, DRAINAGE IMPROVEMENTS AND ROAD IMPROVEMENTS

4.1 General Requirements 4-1
4.2 Clearing and Grubbing 4-1
4.3 Street and Drainage Excavation 4-3
4.4 Borrow, Granular Borrow, Granular Backfill Borrow and Pit Run Borrow 4-14
4.5 Subgrade 4-15
4.6 Watering 4-16
4.7 Excavation for Structures 4-18
4.8 Untreated Base Course 4-21
4.9 Asphalt Materials 4-25
4.10 Bituminous Surface Course 4-26
4.11 Bituminous Prime Coat 4-37
4.12 Bituminous Tack Coat 4-39
4.13 Bituminous Seal Coat 4-39
4.14 Plant Mix Bituminous Seal Coat 4-42
4.15 Emulsion Slurry Seal 4-47
4.16 Portland Cement Concrete 4-49
4.17 Concrete Pavement 4-69
4.18 Concrete Curb and Gutter, Concrete Gutter and Driveways 4-80
4.19 Concrete Sidewalks 4-83
4.20 Street Lighting and Signing 4-85
4.21 Topsoil 4-86
4.22 Seeding, Lawn Removal and Replacement 4-88
4.23 Landscaping 4-94
4.24 Rip-Rap 4-98
4.25 Removal of Existing Street Improvements 4-99
4.26 Placement and Adjustment of New and Existing Utility Structures to Finish Grade 4-102
4.27 Pavement Patching 4-103
4.28 Finishing and Cleanup 4-104

Typical Intersection Locations for Utilities 4-106
Typical Street Cross Section for 68' Right of Way with Curb and Gutter 4-107
Utility Trench 4-108
Pavement Patching Details 4-109
Curb and Gutter Details 4-110
Drain Gutter Details 4-111
Handicap Ramp Details 4-112
Driveway Details (Highback Curb & Gutter) 4-113
Concrete Pavement Joints 4-114
Single Gutter-Inlet Box 4-115
Double Gutter-Inlet Box “B” 4-116
Bicycle-Safe Grating & Frame 4-117
Highback Curb Inlet Box 4-118

Highback Curb Inlet Box Section A-A 4-119
Highback Curb Inlet Box Section B-B 4-120
Highback Curb Inlet Box - Detail of Edge Angle Assembly 4-121
Highback Curb Inlet Box - Throat Detail 4-122
Highback Curb Inlet Box - Inlet Setting Diagrams 4-123
Highback Curb Inlet Box - Gutter Deflectors Detail 4-124
30" Frame and Cover 4-125
44" Frame and Cover 4-126
48" Frame and Cover 4-127
51" Frame and Cover - Cover - Drawing 1 4-128
51" Frame and Cover - Type A Frame - Drawing 2 4-129
51" Frame and Cover - Type B, C, or D Frame - Drawing 3 4-130
35-1/2" Grate and Frame with Adjustable Curb Box 4-131
47-3/4" Grate and Frame 4-132
48" Grate and Frame 4-133
Combination Inlet/Cleanout Box 4-134
Catch Basin 4-135
Catch Basin - Face Plate Detail 4-136
Debris Grate Inlet 4-137
Curb Outlet 4-138
Pipe Outfall Access Control Rack 4-139
Cleanout Box - Plan View 4-140
Cleanout Box - Detail 4-141
Adjust Cleanout Box to Grade 4-142
Dipstone Inlet 4-143
Dipstone Outlet 4-144
Culvert Compaction & Backfill 4-145
Gravel Sump 4-146
Standard City Street Monument 4-147
Straw Bale Install for Erosion Control 4-148
Jute Mesh Installation 4-149
Excelsior Mat Installation 4-150

TREE LIST 4-151

SECTION 5 HYRUM CITY GENERAL REQUIREMENTS AND SPECIFICATIONS FOR SANITARY SEWER INSTALLATIONS

5.1 General Requirements 5-1
5.2 Design Criteria 5-1
5.3 Material Requirements 5-8
5.4 Construction Requirements 5-12

Typical Street Cross Section 5-28
Pipe Installation Detail 5-29
Precast Manhole 5-30
Precast Reinforced Concrete Manhole 5-31
Shallow Manhole 5-32
30" Frame and Cover 5-33
Drop Manhole Connection 5-34
Pipe Intersections 5-35
Sanitary Sewer Service Connection 5-36
Sanitary Sewer Service Connection 5-37
Sanitary Sewer Service Connection - Vertical Riser 5-38
Sampling Manhole 5-39
Sampling Manhole, 4' to 7' Deep 5-40
Sampling Manhole, 7' and Deeper 5-41
Grease Interceptor 5-42
Boring & Steel Casing Detail 5-43

SECTION 6 HYRUM CITY GENERAL REQUIREMENTS AND SPECIFICATIONS FOR POTABLE WATER MAINS, SERVICE LINES AND SECONDARY PRESSURE IRRIGATION INSTALLATIONS

6.1 Design Criteria 6-1
6.2 Material Requirements 6-3
6.3 Water Service Connections and Fire Lines 6-8
6.4 Fire Hydrants 6-11
6.5 Water Main and Service Line Construction 6-13
6.6 Trench Excavation and Backfill for Water Mains 6-14
6.7 Pipe Installation for Water Mains 6-20
6.8 Testing and Disinfecting Field Tests 6-25
6.9 Disinfection of Water Mains 6-27

6.10 Secondary Pressure Irrigation Installations 6-32

Typical Intersection Locations for Utilities 6-39
Typical Street Cross Section 6-40
Utility Trench 6-41
Thrust Block Detail 6-42
Valve Box Collar Detail 6-43
Service Connection & Meter Assembly 6-44
Meter Assembly 6-45
Fire Hydrant Assembly 6-46
Meter Vault for Multiple Meters for 3/4" to 1-1/2" Meters 6-47
Meter Vault & Bypass Detail for 4" and 6" Meters Only 6-48

Meter Vault & Bypass Detail for 2" Meters Only 6-49
Combination Air Release Valve 6-50
Air Release Valve Manhole Detail 6-51
Pressure Reducing Valve Vault - Reinforcing 6-52
Pressure Reducing Valve Vault - Plan View 6-53
Pressure Reducing Valve Vault - Pipe Schematic & Ladder Details 6-54
Pressure Reducing Valve Vault - Legend 6-55
Typical Backflow Preventer Installation 6-56
Straw Bale Install for Erosion Control 6-57
Jute Mesh Installation 6-58
Excelsior Mat Installation 6-59

SECTION 7 HYRUM CITY GENERAL REQUIREMENTS AND SPECIFICATIONS FOR ELECTRICAL INSTALLATIONS

7.1 General Requirements 7-1
7.2 Service 7-2
7.3 Materials 7-2

Three-Phase Primary Underground Service 7-5
Three-Phase Secondary Underground Service 7-6
Underground Cables Front Lot Line Construction 7-7
Underground Cables Side Lot Line Construction 7-8
Secondary Junction Boxes Front Lot Line Construction 7-9
Single-Phase Pad Mount Transformers Front Lot Line Construction 7-10
Transformer Pad Pencell Type TP 7-11
Concrete Transformer Pad 7-12
Clearance Requirements for Transformer 7-13
Typical Transformer and Service Junction Box Installation 7-14
Secondary Junction Box 7-15
Bonding Conductor 7-16
Single-Phase Grounded Front Pad-Mounted Transformer with Single-Phase Tap 7-17
Bushing Mounted Lightning Arrester for a Grounded-Front Pad-Mounted Transformer 7-18
Residential Light Pole Typical Plan & Details 7-19

SECTION 1

HYRUM CITY
GENERAL REQUIREMENTS
AND
CHECKLISTS

1.1 SUBDIVISION APPROVAL PATH

CHECKLIST

1.1.1 All reference to the "City" in this guideline section shall mean the City of Hyrum, Cache County, Utah.

_____ 1. Acquire Hyrum City literature pertaining to subdivisions.
   1. Title 16 of the Hyrum City Municipal Code.
   2. Design Standards and Construction Specifications (DSCS) Book.
   3. Fee schedules for Subdivision.

_____ 2. Arrange a pre-application conference with City Engineer, City Recorder and Zoning Administrator.
   A. A discussion on the concept of the Subdivision.

_____ 3. It is the responsibility of the property owner/developer to ensure that compliance with wetland provisions of the Federal Water Pollution Control Act and any other applicable Federal Laws are met.

_____ 4. If an ingress/egress permit for a State Highway is needed, it is the responsibility of the property owner/developer to contact U.D.O.T.

_____ 5. Prepare a Concept Plan. Check it against the requirements of Title 16.
   1. Fill out the Concept Plan checklist provided in the DSCS book to verify that all requirements have been met.

_____ 6. Submit an application for Planning Commission Concept Plan approval.
   1. Include all documents required by Title 16.
   2. Include a copy of the filled out Concept Plan checklist.
   3. Pay the Concept Plan fee.

_____ 7. Present the Concept Plan in a Public Hearing and Planning Commission meeting in such a manner as both the Commission and public can be informed.
   1. A view graph presentation is suggested.

_____ 8. Make any changes resulting from the Planning Commission review.

_____ 9. Submit an application for City Council approval of the Concept Plan.

_____ 10. Present the Concept Plan in a City Council meeting in such a manner as both the Council and the public can be informed.

_____ 11. When the Concept Plan has been approved by the Council, prepare a Preliminary Plat per the requirements of Title 16, incorporating any changes required by the City Council.

1. Fill out the Preliminary Plat checklist provided in the DISCS book to verify that all requirements have been met.
2. Prepare a list of changes that have been made since Concept Plan review by the Planning Commission.

_____ 12. Submit an application for Preliminary Plat approval by the Planning Commission.

1. Include a copy of the filled out Preliminary Plat checklist.
2. Include a list of changes.
3. Pay the Preliminary Plat fee.

_____ 13. Present the Preliminary Plat in a Planning Commission meeting in such a manner as both the Commission and the public can be informed.

1. Identify if the Subdivision is to be developed in phases, and mark on the Plat those phases.

_____ 14. Make any changes resulting from the Planning Commission review.

_____ 15. Submit the Preliminary Plat for engineering review.

1. Identify any phase development.
2. Hyrum City Engineer and Developer's Engineer may meet to resolve engineering concerns.

_____ 16. Revise Preliminary Plat per engineering requirements.

_____ 17. Present the Preliminary Plat in a City Council meeting in such a manner as both the City Council and the public can be informed.

1. Identify any changes made since the Concept Plan was approved.

_____ 18. When the Preliminary Plat has been approved by the City Council, prepare a Final Plat per the requirements of Title 16, incorporating any changes required by the City Council.

1. Fill out the Final Plat checklist provided in the DISCS book to verify that all requirements have been met.
2. Prepare a list of changes that have been made since Preliminary Plat review by the Planning Commission.

_____ 19. Obtain an engineering estimate of the cost of public improvements.

1. Estimate may be for one phase only if phase development was approved by the City Council on the Preliminary Plat.

2. Each phase may be reviewed by the Planning Commission and must be approved by the City Council.
3. Forward engineering cost estimate to Hyrum City Engineer.

_____ 20. Submit an application for Final Plat review by City Staff.
1. Pay the Final Plat fees.
2. Include the filled out Final Plat checklist.
3. Include a list of changes.

_____ 21. If required, submit an application for Final Plat Review by the City Council per Title 16.
1. Include a statement identifying the proposed method of satisfying the security of performance requirement (bonds, letters of credit, etc. must provide for the two year warranty period as well as the costs of construction).

_____ 22. Present the Final Plat in a City Council meeting in such a manner as both the Council and the public can be informed.

_____ 23. The Subdivider shall transfer all water shares pertinent to the property being developed to Hyrum City, if the Subdivision is serviced by the City's secondary water system.

_____ 24. City will record Final Plat.

_____ 25. Construction may start after all approvals have been given (including U.D.O.T.'s approval if Subdivision abuts a State Highway), all fees have been paid and Surety of Performance Bond is in place.

_____ 26. City Engineer will provide inspection.

_____ 27. City Engineer will furnish Developer with punch list following final inspection.

_____ 28. Developer's Engineer provides record drawings of completed construction together with records of required tests to the City Engineer.

_____ 29. Developer provides a two year guarantee on public improvements.

_____ 30. City will consider releasing some of the remaining Security of Performance on the recommendation of the City Engineer.

1.2 SUBDIVISION CONCEPT PLAN

CHECKLIST

The requirements for a Concept Plan are found in Chapters 16.10 and 17.08 of the Hyrum City Municipal Code. If conflicts exist between this checklist and the Code, the Code will prevail. As per this ordinance, additional information may be required by the Planning and Zoning Commission and/or the City Council prior to subdivision plan approval.

1.2.1 Concept Plan Submission Requirements:

_____ A. Submit application and the Concept Plan checklist to the City Clerk.

_____ B. Submit ten (10) 11" x 17" copies of the Concept Plan to the City Clerk.

_____ C. Pay Concept Plan filing fee.

1.2.2 The Concept Plan shall include:

_____ A. The name of the subdivision;

_____ B. The property boundaries of the proposed subdivision;

_____ C. The names and addresses of all adjacent property owners; the name and address of the owner of the property to be divided, and proof of ownership or authority to act for the owner of the property to be divided;

_____ D. The approximate number of lots proposed and street layout;

_____ E. The approximate total acreage of development as well as size of individual lots;

F. A description of the type of water system proposed along with the water rights;

_____ G. A description of the type of sewer or sanitary waste system proposed;

_____ H. Submitted with the plan shall be the following items:

1. A current plat map highlighted to show the location of the property (Plats available from the Cache County Recorder);
2. A contour map (request for these maps can be made from the U.S. Geological Survey (USGS). A more accurate contour map must be provided if so requested by the Planning Commission;
3. A map showing soil types. Requests for these maps can be made through the Soil Conservation Service (SCS);
4. A written statement from the subdivider as to his/her intent in the development and the feasibility, design criteria and overall impact.

1.2.3 Review-comments requirements and recommendations:

_____ A. Present Concept Plan in Public Hearing and to the Planning Commission. Plans must be submitted at least two weeks before the next regularly scheduled meeting. Planning Commission may visit site with developer.

_____ B. The Planning Commission and various city employees will review the plan for compliance. Planning Commission will give written notice with comments, requirements, and recommendations within 30 days of the review.

_____ C. Make any changes resulting from the Planning Commission review.

_____ D. Submit an application for City Council approval of the Concept Plan at least two weeks before its next regularly scheduled meeting.

_____ E. Requestor will present Concept Plan to City Council.

_____ F. When the Concept Plan has been approved by the City Council, Subdivider proceeds with Preliminary Plat. Submit within 12 months after the Concept Plan approval (failure to meet within 12 months will require a new Concept plan).

1.3 SUBDIVISION PRELIMINARY PLAT

CHECKLIST

The requirements for a Preliminary Plat are found in Chapter 16.12 of the Hyrum City Municipal Code. If conflicts exist between this checklist and the Code, the Code will prevail. As per this ordinance, additional information may be required by the Planning and Zoning Commission and/or the City Council prior to subdivision plan approval.

1.3.1 Preliminary Plat Submission Requirements:

_____ A. Submit application and the Preliminary Plat checklist to the City Clerk.

_____ B. Submit eight (8) 11" x 17" copies of the Preliminary Plat to the City Clerk.

_____ C. Submit four (4) 36" x 24" copies of the Preliminary Plat to the City Clerk.

_____ D. Pay Preliminary Plat filing fees.

1.3.2 The Preliminary Plat shall include:

_____ A. Basic Information. In a title block located in the lower right-hand corner of the plat shall appear the following:

1. Proposed name of the subdivision;
2. Type of development;
3. The location of the subdivision, including the address of the section, township and range;
4. The names and addresses of the owner, subdivider if other than the owner, and surveyor or designer of the subdivision;
5. Tabulation of acres, lots, open space and units per acre; and
6. Date of preparation.

_____ B. Existing Conditions. The plat shall also show:

1. The location of the nearest bench mark and monument;
2. The legal boundary of the proposed subdivision and the acreage included;
3. All contiguous property under the control of the subdivider even though only

a portion is being subdivided, including

(a) The names of all adjoining property owners of record, or the names of adjoining developments/platted subdivisions.

(b) This information shall provide sufficient data, acceptable to the City Engineer, to determine readily the location, bearing, and length of all lines, and to reproduce such lines upon the ground; and the location of all proposed monuments.

4. Location of zoning boundary lines within and adjacent to the proposed subdivision.
5. Location, height and type of existing fence lines within and contiguous to the subdivision;
6. Location, width and name (number) of existing streets within one hundred feet of the subdivision and of all prior platted streets or other public ways, bridges, railroad and utility rights-of-way, parks and other public open spaces, permanent buildings and structures, houses or permanent easements, and section and corporate lines within and adjacent to the tract;
7. The location of all wells, proposed, active and abandoned, and of all springs or reservoirs within the tract and to a distance of at least one thousand (1,000) feet beyond the tract boundaries;
8. Existing sewers, water mains, culverts or other underground facilities within the tract and to a distance of at least one hundred feet beyond the tract boundaries, indicating pipe size, grades, manholes and exact location;
9. Existing ditches, canals, natural drainage channels, open waterways, and proposed alignments within the tract and to a distance of at least one hundred feet beyond the tract boundaries;
10. Equestrian, pedestrian and bicycle trails;
11. Boundary lines of adjacent tracts of un-subdivided land showing ownership;
12. Contour at vertical intervals of not more than two feet, one foot on predominately level land. High water levels of all watercourses, if any, should be indicated on the same datum or contour elevation.

_____ C. Proposed Plan. The subdivision plat shall also show:

1. The layout of the streets showing location, widths and other dimensions of proposed streets (designated by actual or proposed numbers), crosswalks, alleys and easements:
   a. All streets shall be numbered;
   b. Name streets will not be permitted;
2. Location of all existing and proposed curb, gutter and sidewalk within the subdivision including:
   a. An indication of the grades, and
   b. Flow arrows showing direction of storm water surface flows.
3. Typical street cross-section between curb and gutter and sidewalk and street grades.

4. Location of any necessary temporary turnaround easements.
5. If adjacent to a state road specify UDOT access size and location (UDOT approval will be required at final plat).
6. Location and size of existing and proposed culinary and pressure irrigation water lines (including existing lines adjacent to and/or affected by the proposed subdivision).
7. Location of existing and proposed sewer mains including size, depth, and slope (including existing lines adjacent to and/or affected by the proposed subdivision).
8. Existing and proposed storm drainage improvements including:
    a. Major drainage facilities, outfalls, and discharge.
    b. Drainage pipe locations, sizes and depths.
9. Location of detention/retention basins with an indication that the basin(s) will include the following:
    a. Minimum 1-foot freeboard.
    b. 3:1 slopes or flatter.
    c. Grass covering and underground sprinkler system.
    d. Designation of the purpose and conditions, if any, of the dedication or reservation.
10. The location, size and grade of any required piping for irrigation ditches as per the irrigation company letter.
11. The layout, numbers, frontage, square footage, and actual dimensions of lots;
12. Parcels of land intended to be dedicated or temporarily reserved for public use or set aside for use of property owners in a subdivision including, but not limited to, sites to be reserved or dedicated for parks, playgrounds, schools or other public uses;
13. Building setback lines, including showing dimensions where required by the Planning Commission; setbacks may be addressed in the notes.
14. Easements for water, sewer, drainage, utility lines and other purposes as required by the Public Works Committee.
15. Sites, if any, for multifamily dwellings, shopping centers, community facilities, industry or other uses exclusive of the single-family dwelling;
16. Location, function, ownership and manner of maintenance of common open space not otherwise reserved or dedicated for public use;
17. Identification of natural features or sensitive lands including, but not limited to:
    a. Wetlands.
    b. Floodplains, floodways and areas, which would be covered in water in a 100-year storm event.
    c. Areas where ground water rises periodically to within two (2) feet of the surface of the ground.
    d. Slopes exceeding thirty (30) percent.

e. Vegetation areas (including name and size of all existing trees and shrubs which could be incorporated into the subdivision).

f. Threatened or endangered species habitat areas.

18. Environmental impact statement;

19. Location and extent of all cuts and fills exceeding three (3) feet anywhere on the project site and any associated retaining walls.

20. The proposed treatment of the perimeter of the development, including materials and techniques used such as:

    a. Fences.

    b. Berms.

    c. Walls.

21. Title blocks along the bottom of the Preliminary Plat or plan notes shall show the following certification or approvals:

    a. An affidavit or certification of clear title to the effect the applicant is the owner of, or that he/she is authorized by the owner in writing to make application for, the land proposed to be subdivided. The affidavit or certificate shall state clearly in which status the applicant makes his/her application and if in the latter status a copy of the written authorization from the owner shall be submitted with the preliminary plat. In either case, an updated abstract of title or a preliminary title report shall also be submitted, which indicates in whom the fee simple title to such property is vested;

    b. A statement from each of the utility companies involved stating that they have reviewed the plan, that they approve the same as it relates to their particular company, that they are in agreement with placing all their utilities underground within the right-of-way or easements as shown on the plans, and are willing to provide the needed service for the development;

    c. An estimate of all expenses involving the necessary improvements or extensions for a sanitary sewer system, gas service, electrical service, grading and landscaping, street trees, storm drain systems, curbs and gutters, and fire hydrants, pavement, chip and seal, sidewalks, street lighting and signing, and all other improvements that shall be financed by the subdivider;

    d. A statement identifying the developer's proposed method of satisfying the security of performance requirement (16.20.030; (Ord. 98-06);

    e. A block for the City Engineer to sign stating his approval.

    f. A block for the Planning Commission to indicate their approval by the signature of the chairman of the Commission;

    g. A block for the City Council to indicate it's approval by the signature of the Mayor;

    h. A block for Hyrum City Culinary Water and Hyrum City Sanitary

Sewer authorities to indicate their approval by signature;

_____ D. Additional Information Required. In addition to the Preliminary Plat, the applicant shall provide the following information:

1. A copy of the surveyor's plat showing existing fence lines, existing deed lines, existing road right of ways and ROW widths, and proposed subdivision boundary lines.
2. A development phasing schedule (if applicable) including the sequence for each phase, approximate size in area of each phase, and proposed phasing of construction of public improvements, recreation and common open space areas.
3. An explanation of any proposed restrictive covenants (CC&Rs), reservations, or private easements.
4. If the subdivision is proposed as a PUD, the applicant must follow the requirements of Title 17, Section 17.60.
5. Drainage system calculations and an explanatory narrative stamped and signed by a licensed engineer. (for detention/retention basins, submit calculations to justify sizing based on 100 year design storm)
6. A statement from the appropriate agency accepting responsibility for all surface and subsurface drainage that is directed into channels owned by the agency (such as irrigation companies, private landowners, etc.)
7. A written statement from the appropriate agency (such as irrigation companies, private land owners, etc.) regarding the effect of the proposed subdivision on any irrigation channels or ditches and any piping or other mitigation required.
8. Letter(s) of intent for any necessary offsite utility easements across privately owned land.
9. A letter from the Army Corp of Engineers regarding any wetland areas within boundaries of the proposed plat.
10. Landscaping plan for all park, open space, and common ownership areas including:
    a. Location, name and size of all proposed trees, shrubs, and plants.
    b. Indication of proposed seed mix for grass areas.
    c. Indication of proposed irrigation facilities.
11. A listing of the changes made to the plan since the Concept plan was approved.
12. The subdivider's detailed plan for protecting future residents of his/her development from such hazards as open ditches, canals or waterways, non-access streets, open reservoirs or bodies of water, railroad rights-of-way and other such features of a potentially hazardous nature located on, crossing, contiguous or near to the property being subdivided. The subdivider's plan need not cover those features which the Planning Commission determine would not be a hazard to life and/or where the conforming structure designed

to protect the future residents would itself create a hazard to safety of the public. The foregoing doesn't relieve the subdivider of the duty to investigate all possible means of protecting future residents from a potential hazard before a determination is made that the only conceivable means of protection is potentially more hazardous than the hazard itself.

13. Copies of any agreements with adjacent property owners, restrictive covenants, homeowners association agreements, storm water management plans, etc., relevant to the proposed subdivision shall be submitted with the plat to the Planning Commission, as well as any needed approvals from Utah Department of Transportation, (for development bordering State Highways), U.S. Army Corp of Engineers (wetlands issues), irrigation companies or other agencies;

1.3.3 Review-comments requirements and recommendations:

_____ A. Present Preliminary Plat to Planning Commission. Plans must be submitted at least two weeks before the next regularly scheduled meeting.

_____ B. The Planning Commission and various city employees will review the plat for compliance. Planning Commission will give written notice with comments, requirements, and recommendations or accept, reject, conditionally approve or table within 60 days of the review. If the plat is rejected the Planning Commission will give written notice stating the reasons for disapproval.

_____ C. Make any changes resulting from the Planning Commission review.

_____ D. Submit an application for City Council approval of the Preliminary Plat at least two weeks before its next regularly scheduled meeting.

_____ E. A public hearing may be held.

_____ F. Submit the Preliminary Plat for engineering review.

_____ 1. Identify any phase development.

_____ 2. Hyrum City Engineer and Developer's Engineer may meet to resolve engineering concerns.

_____ G. Requestor will present Preliminary Plat to City Council.

_____ H. Identify any changes made since the Concept Plan was approved.

_____ I. When the Preliminary Plat has been approved by the City Council, Subdivider prepares a Final Plat. Submit within 6 months after the Preliminary Plat approval (failure to meet within 6 months will void all prior approvals).

1.4 SUBDIVISION FINAL PLAT

CHECKLIST

The requirements for a Final Plat are found in Chapter 16.16 of the Hyrum City Municipal Code. If conflicts exist between this checklist and the Code, the Code will prevail. As per this ordinance, additional information may be required by the Planning and Zoning Commission and/or the City Council prior to subdivision plan approval.

1.4.1 Final Plat Submission Requirements:

_____ A. Submit application and the Final Plat checklist to the City Clerk.

_____ B. Submit eight (8) 11" x 17" copies of the Final Plat to the City Clerk.

_____ C. Submit four (4) 36" x 24" copies of the Final Plat to the City Clerk.

_____ D. Submit 1 mylar prepared by a licensed surveyor on approved tracing material and the top of plat should be marked “North” or “East”.

_____ E. Pay Final Plat fees.

1.4.2 The Final Plat shall include:

_____ A. General Requirements. The Final Plat shall be prepared by a land surveyor licensed to practice in the State of Utah and shall be presented in india ink on reproducible mylar. All engineering and/or survey documents submitted for City review shall be stamped by said engineer or land surveyor in accordance with the procedures of the Utah State Board for Professional Registration. The Final Plat shall comply with the approved Preliminary Plat, including any changes or additions as required by the City Council.

_____ B. Features to be shown on the final plat. The final plat shall contain at a minimum the following information:

1. The name of the subdivision, which name must be approved by the Planning Commission;
2. A legal description of the subdivision boundaries that includes the quarter-quarter section, section, township, range, principal median and the County of its location;
3. Written and graphic scale, not smaller than 1" to 100' or as recommended by the City Engineer;
4. The basis of bearings used and a north point;
5. A vicinity map locating the subdivision within the section identifying adjoining or nearby plats or certificates of survey and showing prominent landmarks;
6. A notation of any adjoining plats or certificates of survey and titles thereto.
7. The exterior boundaries of the platted area giving lengths and bearings of the boundary lines. If the subdivision is bounded by a water body or

watercourse, a closing meander traverse of that boundary shall be made and shown on the plat. Where curving boundaries are used sufficient data to establish the boundary on angle, and arc length. It is necessary that all dimensions and calculations made by the Engineer shall show proper closures in all boundaries of the subdivision, and no final plat will be approved that shows a plus or minus distance for closure. All subdivisions must have proper closure;

8. Accurate angular and lineal dimensions for all lines, angles and curves used to describe boundaries, streets, alleys, rights-of-way or easements including those contiguous to the platted area, their nature, width, and the book and page number of their recording in the County's records, and areas to be reserved for public use and other important features;
9. Location of proposed easements including any required easements for water, sewer, drainage or irrigation, temporary turnaround easements and a ten (10) foot public utility easement shown along front lot lines and any rear lot lines adjacent to a public right of way or as otherwise required by the City in order to accommodate necessary public utilities;
10. An identification system for all lots, blocks and numbers of streets. Lot lines shall show dimensions in feet and hundredths;
11. The street address for each lot. Each street address shall be assigned by the City to be consistent with the current numbering scheme;
12. Location of zoning boundary lines within and adjacent to the proposed subdivision;
13. Location of all existing homes or buildings within the proposed subdivision that are to remain;
14. True angles and distances to the nearest established street lines or official monuments which shall be accurately described in the plat and shown by appropriate symbol;
15. Radii, internal angles, points and curvatures, tangent bearings and length of all arcs;
16. The accurate location of all monuments to be installed shown by the appropriate symbol. All United States, State, County or other official bench marks, monuments or triangulation stations in or adjacent to the property shall be preserved in precise position;
17. The dedication to the City of all streets and highways included in the proposed subdivision;
18. Street monuments shall be installed by the subdivider's engineer or land surveyor at such points designated on the final plat as are approved by the City Engineer. Standard precast monuments will be furnished by the subdivider and placed as approved;
19. T-posts with rebar and surveyor cap markers shall be shown on the plat and placed at each lot corner in the field;
20. Accurate outlines and dimensions to any areas to be dedicated or reserved for

public use, with the purposes indicated thereon, and of any area to be reserved by deed or covenant for common use of all property owners;

21. All boundaries, lot and other geometries (bearings, distances, curved data, etc.) on the Final Plat shall pose to an accuracy of not less than one part in five thousand;
22. Location, type, and height of any new fencing, berming or other buffering to be installed as part of the development (indicate new fencing on the Final Plat and new *and* existing fencing on the construction drawings);
23. A notation of the distance from the asphalt centerline of each existing road to the new property line of the subdivision;
24. A detail diagram showing typical setbacks for corner and interior lots.
25. A summary of total project acreage, total acreage in lots, total number of units, total acreage of open space or other dedicated parcels, and total acreage in roads and lane miles of road;
26. A notation of any limited access restrictions on the lots that are affected.
27. If surface drainage is to be directed onto a privately owned area for detention or retention as part of the storm drainage system, show an easement around the detention/retention area with metes & bounds on the final plat.
28. If the proposed subdivision is adjacent to or in close proximity to an existing agricultural area or activity, the following note must be added to the Final Plat: *"This area is subject to the normal everyday sounds, odors, sights, equipment, facilities, and all other aspects associated with an agricultural lifestyle. Future residents should also recognize the risks inherent with livestock."*

_____ C. Approval blocks for:

1. A registered surveyor's certificate of survey as applicable under state law;
2. The owner's certificate of dedication. The owners dedication shall be signed by every person having a security interest in the subdivision property, dated, and notarized and should include a reference to any covenants that may be declared and blanks where the County Recorder may enter the book and page number of their recording;
3. A notary public's acknowledgment;
4. The City Planning Commission's certificate of approval;
5. The City Engineer's certificate of approval;
6. The City Attorney's certificate of approval;
7. The Mayor's certificate of approval;
8. A block for Hyrum City Culinary Water and Hyrum City Sanitary Sewer authorities to indicate their approval by signature;
9. The County Surveyor's certificate of approval;
10. The County Recorder's stamp of approval according to the requirements prior to final plat approval.

11. It shall be the responsibility of the developer to obtain signatures for blocks 1, 2, and 3.

_____ D. Construction Drawings. Final construction/plan & profile drawings of all required public improvements consistent with Hyrum City Design Standards and Construction Specifications for Public Works Construction shall be provided with the final plat. Construction drawings must be stamped by an engineer or land surveyor in accordance with the procedures of the Utah State Board for Professional Registration. All revision dates must be shown on the construction drawings. If any revision is included on the Final Plat, which was not present on the Preliminary Plat or a requirement of approval by the City Council, it is the applicant's responsibility to inform the Public Works Committee and City Council of the changes. Failure to inform the Public Works Committee or City Council of revisions not present on the Preliminary Plat or a requirement of approval may result in revocation of any or all approvals. Construction drawings shall include:

1. An overall public improvement plan or index sheet that includes a summary of all improvement and utility information (this sheet is used by City Staff to prepare the bond for public improvements);
2. Location of water and sewer service laterals for each lot including the location of the laterals in relation to each other (water laterals must be located at the center of the lot and sewer laterals 10 feet downstream from the water laterals);
3. Location, depth, pipe type (pipe type may be noted in a legend), and slope of all drainage, and sewer lines including the location and proper spacing of all boxes, manholes and other improvements and details of any detention basins and related piping and orifices;
4. If the placement of irrigation system improvements is required, provide a separate sheet within the construction drawings showing the irrigation improvements including all piping, head gates, boxes, grates, etc. (in conformance with letter issued by the irrigation company). This sheet must be stamped and signed by the irrigation company;
5. Location, pipe type, and size of existing and proposed culinary and pressurized irrigation lines and associated fire hydrants, valves, and blow-offs (note where bends are required on water lines). All valves will be clustered. Concrete collars will be round for culinary lines and square for irrigation lines;
6. Cross sections of all roads including the location of underground utilities, pavement design, base and sub base amounts (indicate the CBR value used to determine the amount of sub base required on the cross section);
7. Location of power line extensions, streetlights, domes and transformers;
8. Landscaping plan for all park, open space, and common ownership areas including:

(a) Planting areas with a list of the name, number and size of plants designated for each area;
(b) Location, name and size of all existing and proposed trees and shrubs;
(c) Location and sizes of proposed irrigation facilities adequate to maintain the planting areas;
(d) Indication of proposed seed mix for grass areas and rate of application;

9. Street signs and traffic control signs;
10. A note stating that one mylar and one paper set of as built drawings shall be submitted to the City upon completion of the public improvements;
11. All other specifications, details, and references required by the Design Standards and Construction Specifications for Public Works Construction.

_____ E. Additional Information Required. In addition to the final plat and construction drawings, the applicant shall provide the following information:

1. Executed or signed easements for any necessary offsite easements across privately owned land;
2. Any necessary deeds or boundary line agreements necessary for recording of the Final Plat;
3. Any required UDOT approvals for access;
4. City engineer's estimate of costs for construction of all required public improvements;
5. Three (3) copies of the California Bearing Ratio (C.B.R.) test results, if required by the City Engineer;
6. Evidence that all property taxes are current and that roll back taxes have been paid, and that no other debts or obligations are outstanding and no liens or encumbrances are placed on the property;
7. A preliminary title report covering all the property located within the subdivision. The report shall be prepared or updated within thirty (30) days of the date of recording of the Final Plat;
8. A final copy of any restrictive covenants (CC&Rs), reservations, or private easements;
9. Letter from the Cache County Health Department regarding any proposed septic tanks or leach fields;
10. Prior to recording the final plat, the new property line adjacent to existing roads must be staked.

1.4.3 Review-comments, requirements, and recommendations:

_____ A. May be required to present Final Plat to Planning Commission. Plans must be submitted at least two weeks before the next regularly scheduled meeting.

_____ B. The Planning Commission and various city employees will review the plat for compliance. Planning Commission will give written notice with comments, requirements, and recommendations or accept, reject, conditionally approve or table within 60 days of the review. If the plat is rejected, the Planning Commission will give written notice stating the reasons for disapproval.

_____ C. Make any changes resulting from the Planning Commission review.

_____ D. Submit two copies of the Final Plat to the City Engineer for review.

_____ 1. After completion of the City Engineer's review, the City Engineer will transmit his conclusions to the Planning Commission and City Council.

_____ E. Submit an application for City Council approval of the Final Plat at least two weeks before its next regularly scheduled meeting.

_____ F. Requestor will present Final Plat to City Council.

_____ G. Identify any changes made since the Concept Plan was approved.

_____ H. When the Final Plat has been approved by the City Council, Subdivider may proceed to obtain all required signatures.

_____ I. The Subdivider shall transfer all water shares pertinent to the property being developed to Hyrum City, if the Subdivision is serviced by the City's secondary water system.

_____ J. City will record Final Plat.

_____ K. Construction may start after all approvals have been given (including U.D.O.T.'s approval if Subdivision abuts a State Highway), all fees have been paid and Surety of Performance Bond is in place.

_____ L. City Engineer will provide inspection.

_____ M. City Engineer furnishes Developer with punch list following final inspection.

_____ N. Developer's Engineer provides record drawings of completed construction together with records of required tests to the City Engineer.

_____ O. Developer provides a two year guarantee on public improvements.

_____ P. City will consider releasing some of the remaining Security of Performance on the recommendation of the City Engineer.

1.5 CONSTRUCTION PHASE:

A. Public improvements: All construction of public improvements shall proceed after the final plat has been approved by the City but before recording. All public improvements shall be completed within one (1) year of the date the plat was approved. A Security of Performance must be furnished before any construction on the improvements is started. The City Council will approve all construction drawings.

B. Inspection: The City Engineer will inspect construction as it proceeds.

C. Final Inspection: At completion of construction, or at the end of one year, whichever comes first, the City Engineer will make an inspection of all improvement and inform the Developer and the City of the results of the inspection. The Developer's Engineer shall have provided the City Engineer with record drawings of the final improvements as constructed. A construction punch list will be made by the City Engineer indicating the items missed or needing correction prior to acceptance of the improvements by the City Engineer.

D. Development in phases: A developer desiring to develop in phases shall gain Concept Plan and Preliminary Plat approval of the entire subdivision showing clearly the individual phases. The Preliminary Plat must contain sufficient detail for the engineering review to ascertain that the public improvements for each phase will perform as required for each phase as well as the full subdivision. Final Plat approval may be gained for each phase independently.

1.6 RECORDING:

The Final Plat shall be recorded by the City after completion and approval of all public improvements.

1.7 SECURITY RECORDING:

The City may hold the "Security of Performance" provided by the developer until two (2) years following the final inspection by the City Engineer. This is for the purpose of assuring the City that all work was done in conformance with City Standards and that the various contractors and material are paid therefore. The developer shall provide a two year guarantee on all public improvements. In the event construction of the public improvements is not completed or not completed in a satisfactory manner one year from date of approval of the final plat, the City may proceed to install remaining improvements at the developer's expense by foreclosing on the developer's "Security of Performance" held by the City.

1.8 MINIMUM IMPROVEMENT REQUIREMENTS:

1.8.1 GENERAL:

This section provides a summary of minimum improvement requirements for subdivisions including roads, sidewalks, curb & gutter, water and sewer utilities. More specific specifications and standards are located elsewhere. Careful reference should be made to those requirements, especially the Subdivision Ordinances, as they are controlling.

1.8.2 DRAWINGS:

Four (4) prints of construction drawings prepared by the Developer's Engineer must accompany submission of the Final Plat. These drawings must show all proposed construction of surface improvements and underground utilities.

A reproducible copy (sepia) and two (2) prints of "As-Built Drawings" shall be prepared and submitted by the Subdivider's Engineer to accurately define for permanent record the surface improvements and underground utilities as they were actually constructed.

1.8.3 GUARANTEE:

All improvements constructed by the Subdivider shall be guaranteed for a period of one (1) year after installation, unless there are other circumstances that warrant a two (2) year period per State law. Prior to the City Council's acceptance of the improvements, for purpose of perpetual maintenance, the City Engineer shall review the condition of all construction and prepare a report of recommendation to the Council. All payments or other improvements requiring replacement or repair shall be defined by the City Engineer and the Subdivider shall complete all required replacement or repairs at his own expense prior to acceptance by the City Council.

1.8.4 ROADS:

Roads shall conform to the following:

A. Total width: The total width shall be 68 feet for collector roads and 82 feet or 99 feet for major roads.

B. Grades of roads: Grades of roads shall be a minimum of one-half of one percent (0.5%) and a maximum of twelve percent (12.0%) on short unsustained stretches of streets and a maximum of eight percent (8.0%) on sustained grades.

C. Asphalt surfacing: The asphalt surfacing shall be provided on all roads with a three inch (3") minimum asphalt pavement thickness on all roads. All asphalt paving shall be installed over a minimum of four inches (4") untreated base course and a subbase of eight inches (8") pit run gravel.

1.8.5 SIDEWALKS:

Sidewalks shall be provided in all subdivisions. Sidewalks shall be five feet (5') wide and four inches (4") thick except at driveways where the thickness shall be increased to six inches (6").

1.8.6 CURB & GUTTER:

Concrete curb and gutter (30 inches wide) shall be provided in all Subdivisions.

1.8.7 WATER LINES:

Water lines shall be of ductile iron pipe and shall be eight inch (8") minimum size, unless otherwise approved by the City Engineer. Six inch (6") will be given consideration if the line is less than 300 feet in length and does not provide fire protection. Valves and five inch (5") hydrants shall be provided at locations defined by the Engineer.

The Subdivider will be required, at his own expense, to install all required “off site” pipelines to connect with the existing distribution system of the City.

Service lines to the property line shall be installed by the Subdivider. The meter box, cover, meter setter and valves will be furnished and installed by the Subdivider. The City will furnish the meter.

1.8.8 SEWER LINES:

Sewer lines shall be of concrete or PVC pipe of eight inch (8") minimum size. Manholes shall be installed at all changes in grade and alignment, at the termination of a sewer line and at maximum spacing of four hundred (400) feet. All manholes shall have a minimum diameter of five (5) feet.

Subdivider will be required, at his own expense, to install all required “off site” sewer extensions necessary to connect with the existing sanitary sewer system of the City or Sewer District.

Sewer service lines shall be four inch (4") diameter PVC pipe. Sewer service lines shall be furnished and installed by Subdivider to ten feet (10') beyond the property line.

1.8.9 STORM DRAINS:

Storm drains, cross gutters, dip stone inlets and other appurtenant facilities shall be provided by the Subdivider as required to adequately dispose of the ten year (10) frequency storm flows developed within the limits of the subdivision and the existing flows entering the proposed subdivision from adjacent properties. The Subdivider shall have the responsibility of providing “off site” storm drain extensions in order to satisfactorily dispose of drainage. Necessary permits for the disposal of storm water must be provided by the Subdivider.

1.8.10 SECONDARY PRESSURE IRRIGATION WATER LINES:

Secondary pressure irrigation water lines shall be of ductile iron pipe or PVC pipe and shall be six inch (6") minimum size, unless otherwise approved by the City Engineer.

The Subdivider will be required, at his own expense, to install all required “off site” pipelines to connect to the existing irrigation system.

Service lines to the property lines shall be installed by the Subdivider.

1.8.11 TREES, PLANTS AND PLANTER STRIP:

The Subdivider will be required to install trees and plants recommended by the City in the Subdivision. A planter strip not less than 7 feet wide shall be provided between the curbing and sidewalk.

1.8.12 STREET SIGNS:

To assure uniformity, the City shall furnish and install all required street signs and the cost thereof shall be charged to and paid for by the Subdivider within a period of thirty (30) days after installation.

1.8.13 MONUMENTS:

Permanent monuments shall be furnished, accurately established and set by the Subdivider at such points as are necessary to definitely establish all lines of the plat except those defining individual lots.

1.8.14 STREET LIGHTS:

The Subdivider shall furnish and install street lights. To assure uniformity, the City shall furnish requirements and specifications for the street lights. The cost of street lights and installation thereof shall be born by the Subdivider.

1.8.15 PLACEMENT OF UTILITIES:

All utilities, i.e. water, sewer, telephone, power, gas, secondary irrigation, etc., shall be placed underground unless otherwise specified or approved by the City. Approval of utility companies shall appear on the preliminary plat.

For utilities and utility sleeves within the proposed road surface improvements; installation shall be completed prior to road surfacing. For utilities outside of proposed road surface improvements; placement of curb and gutter prior to the installation of some utilities may be required to serve as a physical reference but in no case shall placement of sidewalk be initiated prior to the completion of all utilities. It is the developer's responsibility to coordinate the installation schedule with the utility companies.

1.8.16 LIMITS AND RESPONSIBILITY;

Subdivider shall be responsible for costs relative to construction of all public improvements within the proposed subdivision. He shall also construct, at his own cost, all water, sewer (storm and sanitary), secondary pressure irrigation, roads and related improvements necessary for extension to the subdivision as well as all improvements on one-half of adjacent streets.

1.9 WATER SHARES:

The Subdivider shall transfer all water shares pertinent to the property being developed to Hyrum City, if the Subdivision is serviced by the City's secondary water system.

1.10 U.D.O.T.:

If an ingress/egress permit for a State Highway is needed, it is the responsibility of the property owner/developer to contact U.D.O.T. and obtain any and all permits required.

1.11 WETLANDS:

It is the responsibility of the property owner/developer to ensure that compliance with wetland provisions of the Federal Water Pollution Control Act and any other applicable Federal Laws are met.

SECTION 2

HYRUM CITY
DESIGN STANDARDS
AND
CONSTRUCTION SPECIFICATIONS
FOR
PUBLIC WORKS

2. DESIGN STANDARDS AND CONSTRUCTION SPECIFICATIONS FOR PUBLIC WORKS

2.1 GENERAL REQUIREMENTS

2.1.1 INTRODUCTION

The following Hyrum City "Design Standards and Construction Specifications for Public Works" were developed to establish practical, uniform design and construction of improvements in the City of Hyrum. These criteria are not intended to cover extraordinary situations, and in such instances, deviations from the criteria may be allowed where justified, upon approval of the City.

The improvements shall include all street improvements in front of all lots and along all dedicated streets to a connection with existing improvements of the same kind or to the boundary of the development nearest existing improvements. Layout must provide for future extension to adjacent development and be compatible with the contour of the ground for proper drainage. All water lines, sewer lines and any other buried conduit shall be installed to the boundary lines of the development.

2.2 DEFINITIONS

AAN - American Association of Nurserymen

AAR - Association of American Railroads

AASHTO - American Association of State Highway and Transportation Officials

ACI - American Concrete Institute

AGC - Associated General Contractors of America

ACPA - American Concrete Pipe Association

AI - Asphalt Institute

AISC - American Institute of Steel Construction

ANSI - American National Standards Institute

ASA - American Standards Association

ASCE - American Society of Civil Engineers
ASLA - American Society of Landscape Architects

ASTM - American Society for Testing and Materials

AWA - American Wire Gauge

AWS - American Welding Society

AWWA - American Water Works Association

IEEE - Institute of Electrical and Electronic Engineers

MUTCD - Manual on Uniform Traffic Control Devices for Streets and Highways

NEC - National Electrical Code

PPI - Plastic Pipe Institute

SAE - Society of Automotive Engineers

UDOT - Utah Department of Transportation

UL - Underwriters Laboratories Incorporated

WPCA - Water Pollution Control Association

Approved Drawings - Final construction drawings approved by the City.

Base Course - The layer or layers of specified or selected material of designated thickness on a sub-base or a subgrade to support a surface course.

Channel - A natural or artificial water course

City - Hyrum City Corporation

Culvert - Any structure not classified as a bridge which provides an opening under the roadway.

Contractor - The person, company or firm performing the construction work.

Construction - Any work or product which will become the property of the City.

Developer - The owner, builder or person sponsoring the construction.
City Engineer - The engineer, including such assistants as are authorized to represent him, who represents Hyrum City.

Guarantee Bond - The approved form of security executed by the Contractor and his surety or sureties guaranteeing the work against defect and failures.

Inspector - The authorized agent of the City assigned to make detailed inspections of any or all portions of the water line system construction.

Lateral - The sewer line and appurtenances extending from the building to the public sewer line.

Materials - Any substances specified for use in the construction of the project and its appurtenances.

Pavement Structure - The combination of base course and surface course placed on a subgrade to support the traffic load and distribute it to the roadbed.

Plans - The approved project plans and Standard Drawings, profiles, typical cross sections, working drawings and supplemental drawings or exact reproductions thereof, which show the location, character, dimensions and details of the work to be performed.

Profile Grade - The trace of a vertical plane intersecting the top surface of the proposed structural section as shown on the plans. Profile grade means either elevation or gradient of such trace according to the context.

Project - The specific improvement to be constructed together with all appurtenances and construction to be performed thereon.

Project Engineer - The company or firm and its employees providing the engineering services for the project through the developer.

Public Sewer - The sewer line, 8" or larger, owned by the City and not designated as a lateral, which collects and transports sewage.

Right of Way or Easement - A general term denoting land, property or interest therein, usually in a strip, acquired for or devoted to a highway, public street or other improvements.

Road - A general term denoting a public way for purposes of vehicular travel, including the entire area within the right-of-way.

Roadway - The portion of a street within limits of construction.

Service Line - The water line and appurtenances extending from the building to the public water main.

"Shall"/"Should" - Where the term "shall" is used, it is intended to mean a mandatory requirement. Other terms such as "should" and "recommend", indicate discretionary use.

Shoulder - The portion of the roadway contiguous with the traveled way for accommodation of stopped vehicles, for emergency use, and for lateral support of base and surface courses.

Sidewalk - That portion of the roadway primarily constructed for the use of pedestrians.

Specifications - The directions, provision and requirements contained in the Standard Specifications and supplemental specifications as modified by the Special Provisions. Whenever the term “these specifications” is used in this book, it means the provisions set forth in this book as rules and regulations.

Street - A general term denoting a public way for purposes of vehicular travel, including the entire area within the right of way.

Subcontractor - Any individual, firm or corporation to whom the Contractor, with the consent of the Contracting Agency, sublets any part of the contract.

Subgrade - The top of a roadbed upon which the base courses and/or pavement structure and shoulders are constructed.

Surety - The corporation, partnership or individual, other than the Contractor, executing a bond furnished by the Contractor.

Surface Course - The top layer of an improvement.

Traffic Lane - The portion of a traveled way for the movement of a single line of vehicles.

Utility - Tracks, overhead or underground wires, pipe lines, conduits, ducts or structures, sewers or storm drains owned, operated or maintained in or across a public right of way or private easement.

Water Main - The water line, 8" or larger, and not designated as a service line which provides water to an area and is owned by the City.

2.3 REVISIONS OF STANDARDS AND SPECIFICATIONS

When reference is made to the Standard Specification (ASTM, Utah Department of Transportation, Utah State Division of Drinking Water, Department of Environmental Quality), the specification to which referred shall be understood to mean the latest revision of said specification or rule.

These specifications may be modified or deleted by appropriate notes on Approved Drawings.

2.4 CONTRACTORS

All Contractors performing street improvements within Hyrum City shall possess a valid Utah Contractors License and shall be licensed to perform the construction that is contracted for.

SECTION 3

HYRUM CITY
GENERAL IMPROVEMENT REQUIREMENTS
AND
DESIGN GUIDELINES

3. GENERAL IMPROVEMENT REQUIREMENTS AND DESIGN GUIDELINES

3.1 SCOPE:

This section defines the general requirements for all improvements to be built and installed within the City limits of Hyrum City and/or improvements which may became the responsibility of the City. In addition to these requirements, all other applicable codes and ordinances remain in effect. These requirements are intended to allow the public officials of Hyrum City to protect the health, safety, and welfare of residents and visitors.

3.2 CONSTRUCTION DRAWINGS:

Four (4) complete sets of detailed construction plans and drawings of improvements shall be submitted to the City prior to commencing construction. The plan sets shall be required to contain a topographic site survey or orthotopographic mapping certified as to its level of precision by a registered Land Surveyor registered in Utah. No construction shall be started until plans have been approved by the City. One set of plans with the approval mark of the City Engineer shall be kept available at the construction site.

3.3 STANDARDS FOR FINAL CONSTRUCTION DRAWINGS:

The following standards are for the purpose of standardizing the preparation of drawings to obtain uniformity in appearance, clarity, size and style. This level of detail is not necessary at any preliminary approval stage such as Planning Commission approval unless required by City Manager.

3.4 REVISIONS:

All revisions to plans shall be noted on the plans. All major revisions shall be corrected on the plans and submitted to the City for approval prior to construction.

3.5 REQUIRED INFORMATION:

The plans and design shall meet the standards defined in the Hyrum City Design Standards, Construction Specifications, and Standard Drawings, and other plans and ordinances of Hyrum City. The minimum information required on drawings for improvements is as follows:

All drawings and/or prints shall be clear and legible and conform to good engineering and drafting room practice. Size of drawings shall be 24" x 36" (trim line) with 1/2" border on top, bottom and right side with left side 1-1/2".

The following items are required on drawings:

1. North arrow (plan). (North shall be at the top or left side of the drawing).

B. Vicinity map.

3. Scale and elevations referenced to City Datum.

D. Stationing and elevations for profiles.

5. Title block, located in lower right corner of sheet, to include:

1. Name of City.
2. Project title (subdivision, etc.).
3. Specific type and location of work.
4. Space for approval signature of City Engineer with date.
5. Name of engineer or firm preparing drawings with license number.
6. Number all sheets.

6. Scale should generally be 1" = 20' horizontal; 1" = 2' or 4' vertical.

7. Both plan view and profiles must be shown for each side of the street and centerline. Profiles shall extend 300 feet beyond end of work. Maximum finished road slope shall be 12 percent on short sustained stretches and a maximum of 8 percent on sustained grades. Minimum is 0.5 percent. Maximum cul-de-sac length shall be 400 feet with a minimum diameter of 110 feet at the end of the cul-de-sac.

H. When curb and gutter is required the stationing and top of curb elevations with curve data must be shown for all curb returns.

1. Flow direction and type of cross drainage structures at intersections and adequate flow line elevations.

10. Benchmark location and elevation.

11. Type of curb and gutter and distance back of curb to back of curb.

L. Gradient of roadways. Cross-slope transitions must be shown in detail.

13. Storm drain pipe size, type, class and gradient.

14. Calculated amount of storm water flow at each drainage collection structure and in each curb at all intersections shall be shown on an included drainage plan for any project involving more than six (6) residential units and for any commercial or industrial project.

15. Size and location of water mains, valves, meters and hydrants.

P. Type of water pipe.

17. Minimum cover five (5) feet over water lines.

R. Each set of plans shall be accompanied by separate sheets of details for all pavement sections and structures which are to be constructed. A note disclosing the completion date of October 15 for all street patching and construction is desirable.

19. For subdivisions and private streets serving more than six (6) residential units, a computer disk shall be submitted to the City for the City's use in updating their master mapping.

3.6 ADDITIONAL INFORMATION:

The following is a list of information which may be required for the Fire District's approval:

1. Legal description of property.

B. Location: Plot plan, existing adjacent structures.

3. Occupancy type/load.

D. Type of construction.

5. Access roads: grades, widths, parking, turnarounds, cul-de-sac.

F. Height of building: from fire fighting grade.

7. Alarm systems: smoke, fire, sprinkler.

H. Water supply system: source, storage facilities, distribution system, hydrant locations on uphill side of street, if possible.

1. Fire sprinkler plan.

10. Floor plans showing: exit signs, panic hardware, location of fire extinguishers, location of hose cabinets, any other fire protection devices.

11. Information that may be required as determined by the Fire Chief or District Fire Marshall.

3.7 INSPECTION:

All construction work involving the installation of improvements shall be subject to inspection by the City. Certain types of construction may require continuous inspection while others may have only periodic inspections. All inspection and testing costs are paid by

developer or contractor unless Hyrum City contractually assumes this financial burden. No inspections can be made on Saturdays, Sundays or City and federal holidays.

1. Continuous inspection may be required on the following types of work:

    1. Laying of street surfacing.
    2. Pouring of concrete for curb and gutter, sidewalks and other structures.
    3. Laying of sewer pipe, drainage pipe, water pipe, valves, hydrants and testing.

2. Periodic inspection is required on the following:

    1. Street grading and gravel base.
    2. Excavations for curb and gutter and sidewalks.
    3. Excavations for structures.
    4. Trenches for laying pipe.
    5. Forms for curb and gutters, sidewalks, and structures.
    6. Staking of limits of disturbance.
    7. Landscaping and landscape sprinkler information.

3. Requests for Inspection: Requests for inspection of work requiring continuous inspection shall be made to the City three (3) working days prior to commencement of the work. Periodic inspection will require one (1) day notice.

3.8 CONSTRUCTION-COMPLETION INSPECTION:

An inspection shall be made by the City Engineer upon 72 hours notice by developer after all construction work is completed. Any faulty or defective work shall be corrected within a period of thirty (30) days of the date of the City Engineer's Inspection Report defining the faulty or defective work.

3.9 ONE-YEAR CORRECTION PERIOD:

If within one year after completion any work is found to be defective, the contractor or developer shall promptly, without cost to the City, either correct such defective work or remove it from the site and replace it with non-defective work. If the contractor and developer do not promptly comply, or in an emergency where delay would cause serious risk of loss, injury or damage, the City may have the defective work corrected or the rejected work removed and replaced, and all direct and indirect costs of such removal and replacement, together with (25) twenty-five percent in addition thereto, as and for such failure on the part of the subdivider to make the repairs, shall be collected by the City in the manner most convenient to the City from the developer and contractor. Whatever sharing of cost may be agreed upon between the developer and contractor is strictly a private matter between the developer and the contractor.

3.10 REQUIRED IMPROVEMENTS:

The following improvements are generally required unless waived by the City on the basis of site conditions which make these improvements unnecessary. The design of the improvements will vary depending on site conditions, and on the implementation of the Streets Master Plan, Parks and Trails Master Plan, and other similar planning documents adopted by the City that may cover the site or adjoining public properties. Unless otherwise stipulated all improvements shall be designed and built to generally-accepted engineering standards.

1. Curb and gutter, culverts, inlet boxes, and other drainage improvements reasonably necessary to provide proper drainage in accordance with good engineering practice and the City's Master Storm Drainage Plan.

B. Detention of runoff to improve water quality and to delay and reduce peak runoff to a flow rate not exceeding the runoff rate which would have existed prior to any disturbance of the land surface.

3. Pavement designed on a site-specific basis by a registered professional civil engineer. Unless otherwise approved by the City Engineer, design traffic loading shall provide for 100 heavy trucks per day both ways (HTPDBW) for residential streets, 300 HTPDBW for collector roads, and 500 HTPDBW for arterial roads, as shown on the City's Master Streets Plan.

4. Brass cap monuments for permanent survey control.

E. Street lights, street signs, and traffic signs and markers. Operation and maintenance of street lights is a City responsibility only when the light is at the intersection of two City streets. Street name signs shall be in accordance with the attached Standard Drawings. Traffic signage and traffic markers (including but not limited to stop signs and pavement striping) shall be in accordance with the latest edition of the Manual on Uniform Traffic Control Devices. Street lights shall be in accordance with the attached Standard Drawings and approved by the City.

6. Fire hydrants are required at 300-foot intervals measured along public ways or walks or drives which are to be snow plowed. All water mains serving a hydrant shall be a minimum of eight-inch diameter. Each hydrant shall have an auxiliary gate valve located flanged to the tee on the water main.

G. A metallic tracer wire and brightly-colored utility warning tape may be required to be placed over all underground utility lines.

8. Both public and private streets shall be built in accordance with cross-sections shown in these Standards, including pavement, gutter and sidewalks. Projects which would create an unreasonable traffic impact, either for construction or for permanent access,

whether by vehicles, bicycles, or pedestrians on any City street will be required to structurally improve those streets in a manner to be determined by the City such that the street is structurally capable of carrying both the temporary and permanent increases in traffic when analyzed by generally-accepted engineering methods.

1. A study of geological hazards by a geologist or soils engineer may be required to be submitted for all sites unless City Staff specifically omits the requirement. Cuts and fills on each site shall be balanced to minimize hauling.

10. Right-of-way for public streets may be required to be dedicated to the City for sites adjacent to streets identified by the City as being in need of additional right-of-way.

11. Regulatory traffic signage may be required if a project creates any traffic impact.

L. Sidewalks and/or pedestrian trails, with wheelchair ramps at curbs or other obstacles in accordance with Federal, State or City requirements and as required to serve the proposed project.

13. All utilities and meter locations must be shown, including water and sewer laterals, power and phone cables, gas lines, and cable TV. When ever a proposed project will alter, extend, or abandon sanitary sewer mains, all sewer construction shall be done according to Hyrum City Standards.

14. All connections to the City water system shall be metered unless otherwise approved by the City. All connections 4 inches in diameter or larger shall also be provided with a valve at the tee or property line and in other locations subject to the approval of the City. All connections, piping, and appurtenances on the consumer's side of the water meter are to be maintained privately, not by Hyrum City.

15. Any staging area must be identified if requested by the City. Site survey information including detailed horizontal and vertical information relating to existing and future items may be required by the City.

P. A letter from each appropriate utility company approving all utilities, including but not limited to power and phone cables, gas lines and cable TV can be required by the City prior to City approval. All utilities shall be placed underground unless otherwise approved by City.

16. Methods of temporary and permanent erosion control on construction sites and along all drainage channels, swales, or streams below construction sites. Methodology is subject to approval by an independent landscape architect and shall be in accordance with generally-accepted standards of landscape architecture. Limits of disturbance shall be shown on the plans. A landscaping and revegetation plan including irrigation sprinklers may be required.

R. Wherever possible open channels shall be preserved for all major drainages. Culverting of these channels is not allowed unless approved by the City. Landscaping and revegetating to stabilize soils may be required.

19. Water system improvements necessary to keep Hyrum City's water storage and distribution system fully in accordance with recommendations from the Insurance Services Office and Utah State Environmental Health, Division of Drinking Water regulations. Improvements required include but are not limited to: reservoirs and appurtenances, including excess capacity as needed to provide efficient long-term system operation, pressure-reducing stations, pump stations, valves, air release valve vaults, meter vaults, water distribution lines, telemetering, and computer modeling by Hyrum City or the consulting engineer of the City's choice as necessary to determine the impacts of a proposed development on the City water system. The City may require manhole-size valve vaults. A completely-detailed design of each pump house will be required; scope of review includes but is not limited to exterior design and safety issues such as kill switches, ground faulting, and panel locations (2 feet off floor, minimum). Pumps and motors shall have a minimum of 75% wire-to water efficiency unless otherwise approved by City. To simplify parts inventories, water systems equipment manufacturers may be specified by the City.

20. Sanitary sewer improvements required by Hyrum City, including excess capacity as agreed upon between the City and the Developer, shall be designed in accordance with these Hyrum City Standards and Specifications and the latest revision of Utah Administrative Rule R319-3 of the Utah State Environmental Quality, Division of Water Quality requirements for wastewater collection, treatment and disposal.

    Improvements required include, but are not limited to: main lines, laterals, manholes, cleanouts, lift stations, extensions and all appurtenances required for collection of sanitary sewage.

21. Pressurized Secondary Irrigation System improvements required by the City to provide irrigation water to the development shall be designed to provide service to each parcel of land including excess capacity as agreed upon between the City and Developer and extensions as required to provide this service. The required improvements include, but are not limited to: distribution lines, service lines, metering, pressure-reducing stations, valves, air release valves, and appurtenances shall be designed and installed in accordance with these specifications.

22. As-built drawings or record drawings showing the as-built location of all public improvements tied to as-built surface improvements.

SECTION 4

HYRUM CITY
GENERAL REQUIREMENTS
AND
SPECIFICATIONS
FOR
SITE WORK
DRAINAGE IMPROVEMENTS
AND
ROAD IMPROVEMENTS

4. GENERAL REQUIREMENTS AND SPECIFICATIONS FOR SITE WORK, DRAINAGE IMPROVEMENTS AND ROAD IMPROVEMENTS

4.1 GENERAL REQUIREMENTS

4.1.1 General: All pavement and street construction within Hyrum City, including pavement patches on City right-of-ways or City owned property and for private projects as determined by City ordinances, shall be constructed in accordance with the requirements of these Specifications. Because of the severity and sudden onset of winter in Hyrum City, all asphalt placement and all street patching and construction shall be completed by 5:00 p.m. on October 15, unless approved otherwise by the City.

4.1.2 Approved Plans: Pavement and street construction shall be performed in accordance with the Contract Documents for the work, prepared under the direction of a Professional Engineer licensed in Utah and approved by the City. Construction shall conform to the Approved Plans, these Specifications, and the Standard Drawings included in these Specifications.

4.1.3 Licenses and Permits Required: All paving and street construction, including required cuts and fill on City rights-of-way shall be performed by a Contractor licensed and bonded in Utah. A permit shall be secured by the Contractor from the City at least 48 hours before initiating construction. Hyrum City's Inspector shall be notified by the Contractor at least 24 hours before the planned construction is to commence and also before starting whenever construction is delayed for any reason. The Chief of Police must be notified 48 hours in advance of intended closure of any public way.

4.1.4 Inspection: All work shall be inspected by a City authorized Inspector who shall have the authority to halt construction. Whenever any portion of these Specifications and Contract Documents are violated, the City Administrator, by written notice, may order that portion of construction which is in violation of these Specifications and Contract Documents to cease until such violation is corrected. A copy of the notice shall be filed with the Contractor's license application for future review. If deficiencies are not corrected, performance shall be required of the Contractor's Surety.

4.2 CLEARING AND GRUBBING

4.2.1 Description: This item shall consist of clearing and grubbing the areas shown on the Approved Plans, or as described in the Special Conditions, of all trees, brush, and other vegetation, down timber, rotten wood, rubbish, and other objectionable material. It shall include, but not be limited to, removing buildings, fences, lumber, trash piles, concrete, asphalt, and other obstructions interfering with the proposed work, and salvaging such of these materials as may be designated in the Special Conditions or otherwise disposing of

the debris as directed by the Engineer. All work under this item shall be done in accordance with these Specifications and in conformity with the Approved Plans.

4.2.2 Construction Details: The limits of clearing, as well as grubbing operations on Public Works projects are dependent to a considerable degree upon the Contractor's operations and it shall be his responsibility to determine these limits, providing he does not go beyond right-of-way or easement lines. The clearing and grubbing shall be to such width as will provide for an excavation storage area alongside the excavation for material excavated such as trench excavation and backfill, an area for pipe and material storage, and for any haul roads which may be necessary. In areas where drivable streets exist and where the project calls for grading and/or paving, the limits of clearing will be outlined in the Approved Plans or in the Special Conditions. When an area is to be cleared prior to landscaping, the limits of the clearing will be outlined on the Approved Plans and will be staked by the Project Engineer.

Within the limits described, all vegetable growth such as trees, shrubs, brush, logs, upturned stumps, roots of down trees, and other similar items shall be removed and disposed of, unless otherwise directed in the Approved Plans. All trees to be felled shall be felled within the area to be cleared. All tree trimming directed by the Project Engineer shall be done by competent personnel and in accordance with good tree surgery practices. All stumps, roots, etc., shall be excavated, or removed to a depth of not less than three feet below the subgrade or embankment slopes. Under no condition shall said trees, stumps, roots, etc., be left above the ground surface. Where excessive excavation is required for removals, the subgrade shall be compacted to at least 90% of the maximum density determined by ASTM D-1557 (Modified Proctor), in non-traffic areas.

No debris of any kind shall be deposited in any stream or body of water, or in any street or alley, or upon any private property without written consent of the City.

The refuse resulting from the clearing and grubbing operation shall be hauled to a waste site secured by the Contractor and shall be disposed of in such a manner as to meet all requirements of State, county and municipal regulations regarding health, safety, and public welfare.

In all cases, the authority to burn shall not relieve the Contractor in any way from damages which may result from his operations. In no case shall any material be left on the project, shoved onto abutting private properties, or be buried in embankments or sewer trenches on the project.

Clearing and grubbing operations shall be carried out well in advance of the construction operations so as to permit a well planned schedule of work.

The Contractor shall be responsible for all damages to trees and shrubbery not designated for removal and existing improvements resulting from his operations. If the Contractor damages or destroys a tree or shrub not designated for removal, he shall replace it in species and grade with a healthy tree acceptable to the City and guarantee it to live for a period one year. Any damage to trees and shrubs which do not require removal shall be performed by a qualified tree surgeon. Repair work shall be done to maintain the natural shape of the plant.

4.2.3 Cuts and Fills of Embankments: Following the clearing and grubbing operation, the construction of cut slopes will be performed to neat and clean lines in accordance with the cut stakes, showing depth of cut and slope planes as staked. Shoulders of slopes shall be cleared and formed at the highest point and the slopes brought down to the finished subgrade elevations as staked. Loose soil and rocks will be removed from cut slopes during this excavation. Over-excavation of cut slopes shall be replaced with suitable mechanically compacted materials in accordance with the requirements of the City.

The maximum allowable slope on cuts or fills of embankments shall be 2:1 unless justified by specific site tests conducted by a Soils Engineer and approved by the City. Any changes in side slope shall be smoothly graded to avoid abrupt transitions. IBC Chapter 70 and these Erosion Control Guidelines shall be strictly adhered to.

Rock excavations will follow uniform slopes and plains as close as reasonably possible.

4.2.4 Fill Slopes and Embankments: All fill being placed on fill embankments will be placed in level, horizontal, uniform layers of sufficient width to allow thru-passage for working construction equipment. All fill slopes or embankments being constructed on hillside slopes of 10% grade or more shall be horizontally benched into hillside natural ground prior to initial placement of material.

Unless otherwise shown on the Approved Plans, the width of each bench cut or terrace shall be the width of the machine being used to bench. Each bench shall be cut to a minimum of 2' vertically, and the excavated material shall be mixed and compacted with the fill material being placed on the embankment. Unless otherwise shown on the Approved Plans, the standard fill embankment shall consist of a four-foot (vertical) on eight-foot (horizontal) slope followed by a two-foot (horizontal) bench, followed by another four-foot (vertical) an eight-foot (horizontal) slope followed by a two-foot (horizontal) bench, such pattern to be continued as necessary.

4.3 STREET AND DRAINAGE EXCAVATION

4.3.1 Description: This item shall consist of excavating and grading the roadway, side streets, alley and driveway approaches, sidewalk, and planting areas, and alleys, and all work necessary for the completion of the cuts, embankments, slopes, roadway ditches, side

street approaches, sidewalks, planting areas, alleys and subsidiary work, including disposal of all surplus material. All work shall be performed in accordance with the alignment, grades, and cross-sections shown on the Approved Plans.

4.3.2 Classification: Roadway excavation, comprising all materials with the roadway, planting, and sidewalk areas, but excluding trench excavation and borrow pits, will be classified under headings of "Common Excavation," "Solid Rock Excavation," or "Unclassified Excavation" in accordance with the Specifications herein. Any work involving tailings may require special handling procedures.

A. Common Excavation: "Common Excavation" shall be defined as the excavation of all materials that can be excavated, transported, placed, or stockpiled by the use of heavy ripping equipment and wheel tractor-scrapers with pusher tractors or that can be excavated and dumped into place or loaded onto hauling equipment by means of excavators having a rated capacity of one cubic yard or more and equipped with attachments (such as shovel, bucket, backhoe, drag line or clam shell) appropriate to the character of the materials and the site conditions.

B. Solid Rock Excavation: "Solid Rock Excavation" shall cover the removal and disposal of solid rock or concrete, i.e. ledge rock that requires pneumatic drilling and blasting for its removal and also boulders exceeding one cubic yard in volume. Hard pan, hard clay, or glacial till will not be classified as solid rock excavation. Sandstone, silt stone, shale, or other sedimentary rocks which are soft, weathered or extensively fissured will not be classified as solid rock excavation.

C. Unclassified Excavation: "Unclassified Excavation" shall include all materials encountered regardless of their nature or the manner in which they are removed. When excavation is unclassified, none of the definitions or classifications stated in these Specifications shall apply.

Excavation will be classified according to the above definitions by the City Engineer, based on his judgment of the character of the materials and the site conditions.

The presence of isolated boulders or rock fragments smaller than one cubic yard in size will not in itself be sufficient cause to change the classification of the surrounding material.

4.3.3 Definitions: For the purpose of this classification, the following definitions shall apply:

A. Heavy Ripping Equipment: Heavy ripping equipment shall be defined as a rear-mounted, heavy duty, single-tooth or multi-tooth, ripping attachment mounted on a tractor having a power rating of 200 or more net horsepower (at the flywheel).

B. Wheel Tractor-Scraper: Wheel tractor-scraper shall be defined as a self-loading (not elevating) and unloading scraper having a struck bowl capacity of 12-20 yards.

C. Pusher Tractor: Pusher tractor shall be defined as a track type tractor having a power rating of 200 or more net horsepower (at the flywheel) equipped with appropriate attachments.

4.3.4 Protection of Existing Improvements:

A. Surface Improvements: The Contractor shall be responsible for the protection of existing surface improvements as directed elsewhere in the various applicable sections of these Specifications and Contract Documents, and any damage resulting from his operations shall be his sole responsibility.

When required for construction approval, the limits of the disturbance area shall be fenced with a 6-foot chain link fence conforming to UDOT Specifications, or approved equal.

B. Subsurface Improvements:

1. General: Utilities of record will be shown on the Approved Plans insofar as it is possible to do so. Failure of the plans to show the existence of subsurface objects or installations shall not relieve the Contractor from his responsibility to make an independent check on the ground, nor relieve him from all liability for damages resulting from his operations unless otherwise provided in the Special Conditions or by exceptions hereinafter mentioned.

It shall be the responsibility of the Contractor to give proper written notification to the agencies that have utilities in place and to cooperate with these agencies in the protection and relocation of the various underground installations. These agencies will give assistance in the location of the various utilities, but this shall not relieve the Contractor from responsibility for any damage incurred, except in case where the installations are not located as closely as is normally possible with electronic pipe locator. In such case, the Contractor will not be liable if he has proceeded with due caution.

Where house sewer services are damaged through no fault of the Contractor, they shall be repaired and payment will be made therefore by force account as the City Engineer may determine.

2. Private Utilities: Utilities other than those owned and operated by the City are in streets pursuant to franchises or to rights claimed under the laws of the U.S.A. or the State of Utah, and therefore, the respective utility agencies are responsible for

all adjustments and relocations of their facilities. These agencies will locate their facilities for the Contractor and assist him in their protection. The Contractor shall coordinate his work with that of the affected agencies and shall protect them from damage.

The Contractor shall be liable for all damages to private utilities resulting from his operations, and hold the City harmless.

3. Water Mains and Appurtenances: The Contractor shall be responsible for any damage to water mains and water facilities caused by his operations and also for the cost of lost water, and also for the cost of City manpower, materials, and equipment costs as determined by the Public Works Director, except under the following conditions: (1) The Contractor has not excavated below or beyond the required excavation lines and, (2) The Contractor has given proper and timely notice of his work plans, and (3) The Contractor has used reasonable care and has cooperated in minimizing the damages.

   Any damage to water gates, hydrants, valve chambers, and other surface appurtenances which results from the Contractor's operation shall be his sole responsibility.

4.3.5 Construction Details: Off-highway earth moving equipment will not be allowed to haul on or across any streets not being improved in the contract.

4.3.6 Use of Explosives: Blasting will not-be permitted in any case without specific authority of the City, and then only under such restrictions as may be required by the proper authorities. Explosives shall be handled and used in strict compliance with the "Utah Occupational Safety and Health; Rules and Regulations; General Standards" of the Utah State Industrial Commission.

When the use of explosives is necessary for the execution of the work, the Contractor shall have a special clause in his insurance permitting the blasting. He shall use the utmost care so as not to endanger life or property, cause slides or disturb the materials outside the neat lines of the cross-section.

The Contractor shall be responsible for any and all damage or injury resulting from the use of explosives.

The Contractor shall notify the police department and each public utility company having structures in proximity to the site of the work of his intention to use explosives and such notice shall be given sufficiently in advance to enable the companies to take such steps as they may deem necessary to protect their property from injury.

Blasting shall be completed in the vicinity of new structures before construction on such structures is undertaken. All explosives shall be stored in a secure manner and place in compliance with local laws and ordinances and all such storage places shall be clearly marked "Danger--Explosives." No explosive shall be left in an unprotected manner along or adjacent to any existing highway or public place.

4.3.7 Side Street, Alley and Driveway Approaches: Approaches to the project shall be excavated to the limits indicated on the Approved Plans or to such limits as the Engineer may direct. This excavation shall be made in conjunction with the street excavation and in such a manner as to provide safe access for local and emergency traffic at all times.

Where the Engineer deems subgrade material to be unsatisfactory, excavation below grade will be required to such depths as he may direct. Excavation below grade shall be of the same classification as that above it, provided it is removed in the same operation as the normal excavation. Where the Contractor has completed the excavation and is required to move back to remove unsuitable material, or where the additional depth requires special equipment because of the presence of shallow utilities or other unforeseen conditions, the work shall be performed as directed by the City Engineer. No materials shall be wasted without permission of the Engineer. Excavation operations shall be conducted so that material outside of the limits of slopes will not be disturbed, unless otherwise directed.

If the excavation below grade is required because of negligence on part of the Contractor, the necessary excavation below grade and the back filling required to restore the surface satisfactorily shall be at the Contractor's expense.

4.3.8 Planting and Sidewalk Areas: The class of excavation as specified shall include all excavation of planting and sidewalk areas and shall extend to the lateral and terminal limits shown on the approved construction plans. Planting areas shall be defined as those areas existing between the roadway surface and property line, exclusive of the areas occupied by other improvements such as sidewalks. Excavation on planting strips in developed areas shall be made and be terminated to blend neatly with the existing contours. Planting strips shall be filled with topsoil comparable to existing topsoil and shall conform to the plan grade.

4.3.9 Pavement Removal: Pavement removal shall be accomplished and compensation be made therefore under street excavation. Where existing streets are to be excavated and are presently surfaced with asphalt concrete or bituminous mats on earth or granular base, these surfaces shall be considered as part of the excavation. Where existing street pavements extend beyond the back of the new curb line, the Contractor will also be required to remove the pavement as part of the excavation. For trench excavation, the pavement shall be saw cut one-foot back from the trench edge at its widest point. The saw cut shall slightly undercut the remaining in-place pavement. It shall be the Contractor's responsibility to determine the thickness of such surfaces.

4.3.10 Disposal of Excavated Material: Suitable excavated material shall be used for the making of all required project embankments. The more suitable portions of the excavated material shall be stored on the project as the Contractor elects or off the project in areas approved by the City Engineer and used for backfilling of curbs and dressing up of planting areas. Excavated material in excess of that needed to complete all embankments and for backfilling curbs and dressing planting areas shall be removed as directed by the Engineer. Any remaining excess or unsuitable materials shall be disposed of by the Contractor at his own expense.

The Contractor shall not waste any excavated material until he is certain there is sufficient material to complete all necessary project embankment and plantings. If any undue amount is wasted, the Contractor shall secure and furnish approved borrow material at his own expense.

4.3.11 Ditches and Drainage: All ditches shall be constructed as shown on the Approved Plans and shall be so graded as to conform to the natural flow of the water to inlets, catch basins, culverts, or channels. Ditches from cuts shall be located in such manner as to bypass any part of the adjacent fill so that no damage will be caused thereto by running water. The roadbed and ditches shall be maintained in such condition that the work shall be well drained at all times, including periods of work suspension. Proper protection shall be provided to insure that no erosion takes place.

If it is necessary in the prosecution of the work to interrupt the existing flow of irrigation water, existing surface drainage, sewers, or underdrainage, temporary facilities shall be provided until permanent drainage or irrigation work is completed. All areas where seepage or standing water exists must be thoroughly drained, if feasible and required, as directed by the Project Engineer. This work must be done in advance of any grading operations.

4.3.12 Selected Granular Borrow Material: When specified in the Contract Documents or by the Project Engineer, all suitable selected material excavated of local borrow, shall be used for finishing the top portion of the subbase. The selected material shall conform to the requirements as outlined in State of Utah Standard Specifications for Road and Bridge Construction.

When the transporting of selected material directly from excavation to its final position on the roadway will be impracticable, the selected material shall be left in place until it can be placed in final position. If, however, the conditions are such that the undisturbed selected material will hamper ordinary grading operations or cause unnecessary movements of equipment, the Engineer may allow the removal of sufficient selected material and the stockpiling thereof to enable practical hauling operations. If excavation and stockpiling of selected material is specified in the Special Conditions or is ordered by the Project Engineer, the excavation and stockpiling shall be at locations designated by

the Project Engineer, and thereafter be removed from the stockpile and placed in final position upon the roadbed when directed by the Project Engineer.

4.3.13 Slides: Side slopes in cuts and on embankments shall be constructed as staked or re-established by the Project Engineer. In case a slope finished to the lines as staked or reestablished by the Engineer shall slide back of the established slope onto the roadway prism, or out of an embankment before final acceptance of the work, such slide material shall be removed by the Contractor from the roadway, or be replaced in the embankment by him, at the unit contract price for the class of excavation involved, and the slopes shall be refinished as directed by the Project Engineer.

Rock cut slopes shall be scaled of all loose rocks and fragments, and left in a neat, safe, and workmanlike condition.

Materials to replace embankment slides shall be obtained from sources approved by the Project Engineer. Slopes undercut at the base or destroyed in any manner by act of the Contractor shall be re-graded by him parallel to the damaged slope, or as re-established by the Engineer.

4.3.14 Over-break: In all materials encountered in the performance of the contract, over-break is any portion of any such material which is excavated, displaced or loosened outside and beyond the slopes, lines, or grades as staked or re-established, with the exception of such material which occurs as slides as described hereinbefore, regardless of whether any such over-break is due to blasting, to the inherent character of any formation encountered, or to any other cause. All over-break as so defined shall be removed by the Contractor and shall be disposed of by the Contractor.

Whenever it is agreed to in writing and in advance between the Contractor and the Project Engineer, over-break may be used in forming any embankment as planned to replace borrow which otherwise would have to be provided for. In this event, payment will be made for the volume of common borrow or solid rock borrow, as the case may be, which the over-break replaces, at the respective contract prices per cubic yard for such borrow with the additional allowance for haul, if any, on such available borrow; provided, however, that no allowance will be made for over-break which is placed in the embankment as planned in lieu of available material coming from within the neat lines of the roadway prism.

4.3.15 Embankments:

A. Foundation Treatment: The materials composing the embankments must be entirely imperishable and free of frozen material. Wherever the natural surface upon which the embankment is to be placed is of such nature as in the judgment of the City Engineer, will impair the stability or usefulness of the street, the natural surface shall be stabilized or removed and disposed of as the Engineer may direct.

   Where embankments are to be made on hillsides or where a new fill is to be applied upon an existing embankment, the slopes of the original ground or embankment (except rock embankments) shall be cleared, grubbed, and terraced or stepped by

machine cut or by other approved means before filling is commenced. Fills shall be wide enough to accommodate machinery.

When the top layer of the ground underlying the proposed roadway embankment is of loose material, the embankment height is less than 6 feet, the earth remaining in the excavated area shall be loosened to a 4 depth of eight inches or such lesser depth as ordered by the Project Engineer, and then be re-compacted to not less than 90 percent maximum density as defined by ASTM D-1557 (Modified Proctor).

Following preparation of the excavated area, the void shall be filled in layers with selected material from adjacent cuts and compacted as provided in the Contract Documents.

B. Unsuitable Foundation Excavation: When shown in the Contract Documents, unstable natural ground shall be excavated prior to the placement of embankment over the area. The unstable material may consist of peat, muck, swampy or unsuitable materials, including buried roots and stumps. The material shall be excavated by the Contractor as directed by the Project Engineer to give the constructed embankment full bearing on solid ground.

C. Displacement of Unsuitable Foundation Materials: Where shown on the Approved Plans, the roadway embankments to be constructed across low, swampy ground shall be constructed on solid ground to the elevation as indicated by the roadway section on the plans. To obtain this result the overburden of peat, muck, swampy or other unsuitable material lying above the elevation of solid ground shall be displaced or removed by the Contractor, as directed by the Project Engineer, to give the constructed embankment full bearing on the solid ground, as shown by the Approved Plans and as required by these Specifications.

The Contractor shall displace the overburden of unsuitable materials in constructing the embankment by such methods as the Engineer may approve. The overburden material outside of the new embankment slopes fill shall be leveled off and blended in as directed by the City Engineer, and left in a neat condition.

D. Embankment Construction: Embankment construction shall be divided into two classes, rock embankments and earth embankments. Rock embankments shall be all, or any part, of an embankment in which the material contains 10% or more by volume of gravel or stone four (4) inches or greater in diameter. Embankments of all other material shall be considered as earth embankments.

When embankments are constructed across wet or swampy ground which will not support the weight of heavy hauling and spreading equipment, the Contractor will be required to choose such methods of embankment construction and to use such hauling and spreading equipment as will least disturb the soft foundation. When soft foundations are encountered, the lower part of the fill may be constructed by dumping

and spreading successive vehicle loads in a uniformly distributed layer of thickness not greater than that necessary to support the vehicle while placing subsequent layers, after which the remainder of the embankment shall be constructed in layers and compacted as specified in the Contract Documents.

It is not the policy of the City to allow an increase in the planned depth of embankment material over soft, wet, or swampy ground for the sole purpose of providing support for heavy hauling and spreading equipment, unless the Contractor proves to the satisfaction of the City Engineer that the planned depth is inadequate to support lighter hauling vehicles. If it proves necessary for the Contractor to use smaller hauling vehicles or different methods of embankment construction than he had originally contemplated in order to comply with the foregoing, such shall not be the basis for a claim for extra compensation. The unit contract price for the various pay items involved shall be full compensation for all labor, materials and equipment necessary to perform the work as outlined herein.

At the time of compaction, the moisture content of that portion of embankment material passing a number four (4) sieve shall be not more than three (3) percentage points above or below the optimum moisture. Embankment material which contains less moisture than required for proper compaction with the compacting equipment being used shall be watered in the amount ordered by the Project Engineer.

E. Rock Embankment Construction: Rock embankments shall be constructed in layers not exceeding twelve (12) inches in depth, except in the case that the average size of the fragments exceeds twelve (12) inches, the layers may be as deep as required to allow their placement subject to approval by the City Engineer. Occasional fragments exceeding the average size shall be disposed of instead of being incorporated in the embankment.

Each layer shall be compacted by routing the loaded and unloaded hauling equipment or through the use of rollers. The roadway shall be compacted to at least 95% of the maximum density determined by ASTM D-1557 (Modified Proctor).

The material shall be placed carefully so that the larger pieces of rock or boulders are well distributed. The intervening spaces and interstices shall be filled with the smaller stone and earth as may be available so as to form a dense, well compacted embankment. Each layer shall be compacted as specified in the Contract Documents.

In making rock embankments, the Contractor will be required to bring the fills to within twelve (12) inches below grade, as designed by the Project Engineer, and to construct the remainder from suitable fine material placed in layers, smoothed and compacted. The finer materials from rock excavations shall be saved as far as practicable for use in topping out rock fills and backfilling over the subgrade excavation in rock cuts.

F. Earth Embankment Construction: Earth embankment shall be constructed in compacted layers of uniform thickness and moisture. The layers shall be carried up full width from the bottom of the embankment to avoid widening the edges after the center has been brought to grade.

1. Compacting Earth Embankments: Earth embankments shall be compacted with modern, efficient, compacting units satisfactory to the Project Engineer. The compacting units may be of any type provided they are capable of compacting each lift of the material to the specified density. The use of hauling equipment to obtain partial compaction will be allowed but the Contractor will be required to compact the full width and depth of each layer of material to the required density. The right is reserved for the Project Engineer to order the use of any particular compacting unit discontinued if it is not capable of compacting the material to the required density in a reasonable time.

   Embankments normally shall be constructed in successive horizontal layers not exceeding eight (8) inches in loose thickness. If approved by the Engineer, successive horizontal layers up to a maximum depth of twelve (12) inches may be placed, provided the required density is obtained throughout the fill width and depth of each layer.

   Each layer of the embankment shall be compacted to at least ninety-five percent (95%) of the maximum density determined by the "Compaction Control Test".

   At all locations that are inaccessible to a roller, the embankment shall be brought up in horizontal layers and compacted thoroughly with mechanical tampers. The horizontal layers shall not exceed six (6) inches in loose thickness.

2. Compaction Control Test: Optimum moisture content and maximum density for other than granular materials shall be determined in accordance with the Method of Testing for Moisture-Density Relations of Soils, as defined by ASTM D-1557 (Modified Proctor).

G. Embankments and Structures, Trestle and Bridge Ends: The work of filling around structures and the ends of trestles and bridges and the constructing of embankments shall be undertaken and completed as soon as possible after each structure is completed, or when ordered by the Project Engineer.

   In filling around the structure, trestle and bridge ends, the Contractor shall bring the fill up equally on all sides of the bracing and the columns of the bridge to prevent distortion of the bents and columns. This method shall also be used in bringing up the fill on both sides of the bulkheads as shown on the Approved Plans, or as directed by the Project Engineer. The embankments shall be constructed under the bridge to the height and dimensions as shown on the Approved Plans, or directed by the Project Engineer. Fill shall not be placed against green concrete and wedging it action against

walls shall be prevented by stepping or roughening the sides of excavation. All drainage openings or seep holes in the masonry or concrete shall be backfilled one foot in each direction from the opening with coarse concrete aggregate.

The embankment and backfill at both ends of all rigid-frame concrete structures which do not have provisions for expansion shall be brought up and compacted simultaneously to prevent lateral displacement of the structure due to unbalanced earth loading. The strength requirements for the closing pour of concrete for frame structures must be met and approved by the City or the pour shall have been completed at least seven days before backfilling.

4.3.16 Borrow: Borrow shall conform to the specifications of Section 4.4.

4.3.17 Compacting Cut Sections: When the density of the natural ground of a graded roadbed in a cut section, upon which a specified layer of surfacing or selected material is to be placed, is less than the requirements herein unto for specified for the method of compaction used, the top two (2) feet of the graded roadbed shall be compacted in accordance with the requirements of compacted earth embankment, which is specified. If ordered by the City, the material shall be excavated to a depth of sixteen (16) inches and stockpiled temporarily, and the underlying eight (8) inches be then loosened, watered if necessary, and compacted to the required density. The excavated material shall then be replaced in successive layers as required under Section 4.3.15F, watered if necessary, and compacted to the required density.

4.3.18 Revegetation: All exposed cut and fill areas must be re-vegetated in accordance with the requirements stipulated and the Approved Plans or specified in the Special Conditions.

4.3.19 Snow Removal: Whenever the surface of a cut or the site of an embankment is covered with snow sufficiently deep to impair the utility of the work, the snow must be removed and deposited beyond the slope stakes at the Contractor's own expense. Work of this nature shall be at least one hundred (100) feet in advance of the excavation and placing of the embankment.

4.4 BORROW, GRANULAR BORROW, GRANULAR BACKFILL BORROW AND PIT RUN BORROW

4.4.1 Description: This work shall consist of furnishing material obtained outside the right-of-way for use in the construction of the embankment, backfill or for other portions of the work.

"Borrow" shall consist of material conforming to classifications A-1-a through A-4 of AASHTO Designation M-145.

"Granular Borrow", when specified, shall consist of material conforming to Classifications A-1-a, A-1-b, A-2-4, A-2-5, or A-3 of AASHTO Designation M-145. The

material shall meet the design CBR*; a requirement for suitability of source and not for project control testing.

"Granular Backfill Borrow" shall conform to the requirements of A-1-a Classification of granular materials of AASHTO Designation M-145 modified so as to limit the maximum size to 2 inches and be well graded.

“Pit Run Borrow” shall conform to the requirements of A-1-a Classification of granular materials of AASHTO Designation M-145 modified so as to limit the maximum size to 4-inches and be well graded.

4.4.2 Construction Methods: The Contractor shall notify the Project Engineer sufficiently in advance of opening any borrow areas so that cross-section elevations may be taken and the material tested, if necessary, before being used. Clearing out of vegetation and stripping of unsatisfactory material from the pit or blending of materials when required, shall be performed by the Contractor at his expense. When there is a choice in quality of materials in the borrow source, the best material, when directed, shall be placed in the top portion of the embankment. Borrow material shall be placed in the embankment and used for backfill.

Borrow material shall not be placed until after the roadway excavation has been placed, unless approved by the City. If the Contractor places more borrow than is required and thereby causes a waste of excavation, the amount of such waste will be deducted from the borrow volume.

4.4.3 Revegetation: All borrow and stockpile areas shall be re-vegetated in accordance with the requirements stipulated on the Approved Plans or specified in the Special Conditions.

*** NOTE: CBR here and wherever mentioned herein, shall always be understood to mean "California Bearing Ratio."**

4.5 SUBGRADE

4.5.1 Description: The subgrade will be considered as those areas and surfaces of new or existing streets, alleys, driveways, sidewalks, or other public places upon which additional materials are to be placed, under the Contract, or which are to be constructed or prepared for the future placement thereupon of other materials in accordance with these Specifications and Contract Documents, which will be staked for lines and grades by the Project Engineer.

4.5.2 Construction Details:

A. Subgrade for Base Materials: In advance of setting line and grade stakes, the subgrade area shall be cleared of brush, weeds, vegetation, grass and debris, all of which shall be satisfactorily disposed of as specified by the Project Engineer or by the Contract

Documents. All depressions or ruts which contain water shall be drained. The subgrade shall then be bladed, ripped, and compacted to remove inequalities and secure a uniform surface.

After the foregoing requirements have been complied with, the proper alignment and grades will be given by the Project Engineer. Where normal cross-sections are being constructed, stakes will be set at convenient offsets at intervals not to exceed fifty (50) feet or where necessary, such as at street and alley intersections. It shall be the responsibility of the Contractor to set centerline grades which may be needed except in cases where the street grades are warped or otherwise do not conform with the typical section.

The existing subgrade shall be compacted to ninety-five percent (95%) of maximum density determined by ASTM D-1557 (Modified Proctor).

All soft, spongy, or yielding spots shall be entirely removed and the space refilled with granular backfill borrow material, thoroughly compacted, and shaped to grade elevations.

The final finishing shall be to a height above the finished subgrade cross-sections as may be determined, by trial and experience, to be proper to ensure thorough compaction to the grade as staked, by finished grading and rolling.

When ordered by the Project Engineer, the Contractor shall sprinkle the subgrade with water in such quantities as directed.

Grades and lines, throughout the stages of constructing the subgrade, shall be secured from the reference stakes. The subgrade shall be maintained by the Contractor, at his expense, at the required compaction and in the finished condition until the first course of surfacing is placed upon it.

4.6 WATERING

4.6.1 Water for Streets: Water for compacting embankment, constructing subgrade, placement of screened gravel and crushing surfacing, and for laying dust caused from grading operations or public travel, if ordered by the Project Engineer, shall be applied in optimum amounts and placed as designated by the Project Engineer.

4.6.2 Source of Water and General Requirements:

A. Water Supply: The Contractor shall make arrangements for and provide all necessary water at his own expense, unless otherwise provided in the Special Conditions.

If the Contractor purchases water from The City at a fire hydrant on or near the project, all arrangements shall be made by him at his own expense and payment be

made to the City on basis of the actual quantity of water metered. The City must authorize the opening of any City hydrants. All water usage will be metered. Application for service shall be made to the City Manager located in the City Offices.

B. Requirements and Responsibility: The Contractor shall use only those hydrants designated by the City and in strict accordance with its requirements for hydrant use.

The Contractor shall secure permission from and comply with all requirements of the City before obtaining water from the fire hydrants.

The Contractor shall use hydrant wrenches only to open hydrants. He shall also make certain that the hydrant valve is open "full," since "cracking" the valve causes damage to the valve. An approved auxiliary valve shall be provided on the outlet line for control purposes. Fire hydrant valves must be closed slowly and completely to avoid a surge on the system, which creates undue pressure on the water lines. The Contractor shall carefully note the importance of following these directions.

If one of the Contractor's employees shall knowingly or unknowingly damage any hydrant valve system, the Contractor will be responsible for all resulting costs and damages. He shall immediately notify the City so that the damage can be repaired as quickly as possible.

Upon completing the use of the hydrants, the Contractor shall notify the City, so that the hydrants may be then inspected for possible damage. Any damage resulting from the use of the hydrants by the Contractor will be repaired by the City and the cost thereof shall, if necessary, be borne by the Contractor.

The Contractor shall furnish all connectors, wrenches, valves, and small tools that may be necessary to meet the requirements of the City pertaining to hydrant use.

Violation of these requirements will result in fines and will lay the Contractor liable for damage suits because of malfunctioning of damaged fire hydrants, in the event of fire.

4.6.3 Equipment Requirements:

A. General: Where hauled water is required, the tank truck and/or trailer shall meet all safety and licensing regulations and shall be provided with a pump of such size and capacity as to provide for a discharge equivalent to that required for hydrant settling water. Adjustable spray heads, front or rear, and spray bar shall provide uniform and controlled application of water without or washing.

An approved pressure pipeline hose nozzle or sprinkling system may be used for applying water in embankment construction or to moisten material before excavation.

The Contractor shall provide sufficient equipment to apply water as directed. Insufficient or inadequate watering equipment shall be cause for closing down those operations affected by such until the Contractor makes proper remedy of the deficiency.

4.7 EXCAVATION FOR STRUCTURES

4.7.1 Description: The provisions of this section of the Specifications concern the removal or excavation of all materials of whatsoever nature that is necessary for the construction of footings, bases, or any other foundation work required to support pump stations, headwalls, water tanks, transmission towers, and similar structures.

This section also includes the construction and subsequent removal of all shoring, cribs, cofferdams or caissons; the pumping which may be necessary for the execution of the work, and the placement and compaction of all necessary backfill.

It is not intended that excavation for culverts, sewers, and water mains and their appurtenances, manholes, inlets, and catch basins, conduits, and miscellaneous work covered elsewhere in these Specifications or in the Special Conditions shall be considered as structure excavation.

A. Classification: Structure excavation will not be further classified into solid rock excavation or common excavation, or into wet or dry excavation. Structure excavation shall include the necessary grubbing of structure sites which otherwise would not be grubbed, the excavation of any and all formations encountered inside the limits which define structure excavation, and the removal and disposal of all debris, including submerged or buried timber, and all pumping that may be necessary for draining and dewatering the excavation. It shall also include the furnishing of all equipment necessary for the performance of this work, the placement of all necessary backfill inside the limits which define structure excavation, as hereinafter specified, and the disposal of excavated material that is not required for backfill.

4.7.2 Construction Details:

A. Preservation of Channel: When foundations or substructures are to be constructed in or adjacent to running streams, no excavation shall be done outside of cribs, cofferdams, caissons or sheet piling, nor shall the natural stream bed adjacent to the structure be disturbed without the written permission of the City. Care shall be taken to minimize damage to vegetation and to minimize silt entering the stream. Excavation work shall not be done during periods of high snowmelt. If any open pit excavation or dredging is permitted at the site of the structure before the placement of cribs or cofferdams, the Contractor shall, after the foundations are in place, backfill such excavations to the original surface of the stream bed with material satisfactory to

the City. The backfilling material shall be of such quality and shall be placed in such a manner that it will offer the same resistance to scour as the material removed.

B. Excavation in Open Pits: When footings can be placed in the dry without the use of cofferdams and when cofferdams are not necessary for the preservation of conditions affecting the safety of the completed structure, the Project Engineer may permit the excavation of open pits without shoring, cofferdams or cribs. Such pits shall be constructed with side slopes sufficiently flat to prevent sliding or caving. The Contractor shall assume full responsibility for the prevention of any such slides adjacent to any such excavation, and in the event of any such slide, the Contractor shall remove the additional material brought down by the slide at his own expense.

   In case the material disturbed by a slide lies within an area upon which a portion of the structure is to be constructed, the Contractor shall excavate the disturbed material and backfill the excavated area to the original ground line with material satisfactory to the Project Engineer. This material shall be placed and compacted in the manner specified elsewhere herein. All costs in connection with excavating, backfilling, compacting, and restoring such a slide area to its original position and condition shall be borne by the Contractor.

   When water is encountered, ample provision shall be made for draining or pumping, and the excavation shall be accomplished by such means as will prevent stirring up or softening the bottom. Foundation material unduly disturbed or softened by the use of equipment in the bottom of the pit or by inadequate handling of water shall be removed by the Contractor at his own expense. Such material removed shall be replaced with satisfactory material.

C. Depth of Footings: Foundation for all structures shall be excavated to the depth and lines indicated on the Approved Plans. The Project Engineer may require the Contractor to excavate below the elevations shown on the Approved Plans, or may order him to stop above the elevations shown, depending upon where suitable foundation material is encountered.

D. Preparation for Placing Foundations: In solid rock or other hard material, the excavation shall be carried at least 6" to 12" into the rock or hard material to form a key for the concrete footing, or to such additional depth as shown on the Approved Plans or directed by the Project Engineer. The bottom of the pit shall be cleaned of all loose material and cut to a firm surface, either level, stepped or serrated. When concrete is to rest on an excavated surface other than rock, special care shall be taken not to disturb the bottom of the excavation and the final removal of all loose or soft material shall be made just before the concrete is placed.

E. Shoring, Cribs, and Cofferdams: Except as provided in Section B, all excavations shall be shored, braced, or protected by cofferdams in accordance with approved methods. No excavation or dredging shall be done before shoring, crib, or cofferdams

are placed, except with the written permission of the City. If permission is given, it shall not relieve the Contractor of his obligation to anchor or otherwise hold the crib or cofferdam in place and secure it against tipping or displacement. Unless otherwise ordered, all cofferdams, sheeting and bracing shall be removed after serving their purpose.

F. Inspection: The Contractor shall notify the City before starting any excavation. From time to time during the progress of excavation, the City will examine at its discretion the character of material excavated.

G. Disposal of Excavated Material: The material obtained from structural excavation shall be used as the Project Engineer may require, either in construction embankments, or for backfilling over and around the structures after they are complete. When the material is unsuitable or not required for either of these purposes it shall be disposed of in a satisfactory manner.

H. Backfilling: All material used for backfill shall be of a quality acceptable to the Project Engineer and shall be free from large or frozen lumps, wood or other extraneous matter. The backfilling of openings made for structures shall be considered as a necessary part of the excavation, although the Project Engineer may require that the material for use in making a backfilling be obtained from a source entirely apart from the structure. Except as may be otherwise specified hereinafter, spaces excavated and not occupied by abutments, piers, or other permanent structures shall be backfilled up to the surface of the surrounding ground, with a sufficient allowance for settlement and, in general, the top surface of the backfill shall be neatly graded.

Backfill in existing street areas or in areas that must support roadway embankment or which is a part of any roadway embankment, shall be placed in horizontal layers not more than eight (8) inches thick, and each layer shall be tamped and compacted to 95% of the maximum density as determined by ASTM D-1557 (Modified Proctor).

The use of mechanical tampers may be required for compacting backfill for certain items as shown in the individual specifications for such items, and as may be required in the Special Conditions or on the Approved Plans where greater density than that specified above is to be obtained.

Special precautions shall be taken to prevent any wedging action against abutments and wing walls. If the excavation has sloping sides, the slope shall be broken up by stepping or serration to prevent wedge action before the backfill is placed. Fill placed around culverts, piers, and other underground utilities shall be deposited on both sides to approximately the same elevation at the same time.

The Project Engineer may order the backfill around piers and in front of abutments and wings to be of stone or lean concrete if the excavation has been in hard material

exposed to erosion. Backfill of this nature will be paid for by force account unless otherwise provided for in the proposal. If the material used in making the backfill is too dry to permit proper compaction, the Engineer may require the addition of sufficient water to allow satisfactory compaction. If the material is too wet to permit proper compaction the Engineer may require a more suitable material to be substituted.

4.8 UNTREATED BASE COURSE

4.8.1 Description: This item shall consist of the construction of a base course composed of a natural gravel, crushed rock, or crushed slag placed on a prepared subgrade in conformance with the lines, grades, and dimensions shown on the Approved Plans or established by the Project Engineer and in accordance with these Specifications. Each aggregate source shall be tested and the results submitted to the City at least 48 hours prior to hauling any material on- site. In order to facilitate the field-testing, the Contractor shall submit single gradation target values along with these test results.

4.8.2 Mineral Aggregate: Mineral aggregate shall conform to the following requirements:

A. On that portion of the aggregate passing the No. 40 sieve, the liquid limit shall not exceed 25, nor shall the plasticity index exceed 6, when tested in accordance with AASHTO T-89 and T-90.

B. The dry mineral aggregate shall be uniformly graded within one of the gradations specified in subsection 4.8.3, when tested in accordance with AASHTO T-27. The gradation to be used shall be the option of the Contractor, unless otherwise specifically designated in the Special Conditions, none other shall be used, unless authorized in writing by the City. The source of material must be approved by the City.

   The total amount of material passing the No. 200 sieve shall be determined by washing in water in accordance with AASHTO T-11.

C. Aggregate shall have a percentage of wear not exceeding 50, when tested in accordance with AASHTO T-96. This requirement shall be used in determining the suitability of the aggregate source and for routine control testing.

D. The aggregate shall be of uniform density and quality, and shall have a rodded weight of not less than 75 lbs. per cubic foot, when tested in accordance with AASHTO T-19.

4.8.3 Gradation: Acceptance of aggregates with respect to gradation shall be based on the average gradation of 5 samples taken from a test lot. A test lot shall not exceed 5000 tons of aggregate.

Test samples shall be taken as the aggregate is used and shall be obtained from the roadbed immediately behind the spreader or lay down machine, prior to any further processing or compaction. The locations to be sampled shall be chosen on a random basis.

The method of taking the sample shall conform to AASHTO T-2.

A test lot shall be accepted when the average gradation of the 5 samples meets the ideal gradation with the tolerances shown below and when the number of individual samples outside the gradation band and within the specified tolerances does not exceed the following:

1-1/2", 3/4", 1/2" Sieves	not more than 3 samples
No. 4 and No. 16 Sieves	not more than 2 samples
No. 50 and No. 200 Sieves	not more than 1 sample

The dry mineral aggregate shall conform to one of the following gradations:

1-1/2" Gradation

Sieve Size	Ideal Gradation	Ideal Gradation Tolerance
1-1/2"	100	0
3/4"	86	±5
1/2"	72	±5
No. 4	48	±5
No. 16	26	±3
No. 50	17	±2
No 200	8	±2

1" Gradation

Sieve Size	Ideal Gradation	Ideal Gradation Tolerance
1"	100	0
1/2"	85	±6
No. 4	55	±6
No. 16	31	±4
No. 50	19	±2
No 200	9	±2

3/4" Gradation

Sieve Size	Ideal Gradation	Ideal Gradation Tolerance
3/4"	100	0
3/8"	85	±7
No. 4	61	±6
No. 16	33	±5
No. 50	19	±2
No 200	9	±2

4.8.4 Mixing and Placing: The subgrade on which the sub-base course is to be placed shall be uniformly shaped and firmly compacted.

If the required compacted depth of base course exceeds 6 inches, the base shall be placed in two or more layers of approximately equal depth with no layer exceeding six inches. If vibratory compacting equipment is used, the compacted depth of a single layer of base course may be increased to 8 inches upon written approval from the City Engineer.

Unless otherwise specified in the Special Conditions, the sub-base course shall be mixed by method (a) or (b). Method (a) shall be used on all projects where more than 50,000 tons of untreated sub-base course are to be produced except method (b) may be used when the total daily production does not exceed 300 tons, and where material is used for miscellaneous construction, such as under sidewalks, curbs, detours, etc. Method (b) may also be used when the total contract amount is less than 50,000 tons.

Method (a): The mineral aggregate shall be mixed with water in a stationary plant. Water shall be added in the amount necessary to obtain the optimum moisture content for compaction plus or minus 2 percentage points. The mixed base material shall be transported to the road in such manner as to retain the proper moisture content and shall be placed on the roadbed by means of an approved spreader.

Method (b): The mineral aggregate shall be placed on the subgrade by an aggregate spreader or windrow sizing device, after which it shall be uniformly mixed in a traveling mixing plant, by motor graded or by other approved equipment. During mixing, water shall be added in an amount sufficient to provide the optimum moisture content for compaction plus or minus 2 percentage points.

The furnished base material shall be uniform in appearance, texture, and moisture content, and shall be free from pockets of segregated material.

4.8.5 Compaction: The base course shall be uniformly compacted over the test area. The material shall have uniform moisture content within two (2) percent of optimum prior to

application of compactive effort. A test area shall not exceed 2500 feet in length and shall be the full width of the course being placed or as conditions require. The location of four test sites within a test area shall be chosen on a random basis. The in-place field density may be determined by ASTM D-1557 (Modified Proctor).

The test area shall be accepted when the average of the four density determinations is not less than 95 percent of maximum laboratory density, as determined ASTM D-1557 (Modified Proctor), and when no one determination is lower than 92 percent of maximum laboratory density.

If an individual test result falls below 92 percent of maximum laboratory density, the base material represented by that test will be considered defective and the Contractor shall further compact the test area. After further compaction, the original test area and one other randomly selected site within the test area shall be tested. The average of these two test results shall be included in determining the mean density of the test area. The original test result shall not be included. If the test area still does not meet the required density, the process of re-compacting the retesting may be repeated.

In addition to the above acceptance tests, the Engineer reserves the right to test any area which appears defective and to require further compaction of areas that do not meet at least 92 percent of maximum laboratory density.

If the mean density of the base course placed on any production day does not equal or exceed 96 percent of maximum laboratory density but is not below 92 percent of maximum laboratory density, the test area may be accepted at a reduced price upon written request from the Contractor. The computation of the adjusted price for the untreated base course with respect to density shall be based upon a pay factor of 0.90. Any test area with a density below 92 percent of maximum laboratory density shall be considered defective. The Engineer may order the correction or removal of any or all of the base course in that test area.

4.8.6 Finishing: The base shall be finished to a smooth uniform line and grade with surface deviations not exceeding 0.5 inch, plus or minus in 10 feet. The determination of compliance with smoothness may be made with a straight-edge, chalk-line, or profilograph.

The thickness of the base shall be reasonably close to that shown in the Contract Documents or as designated by the Project Engineer. Acceptance of the finished base with respect to thickness shall be on the basis of test areas selected by the City Engineer, not to exceed 50,000 square feet in size. Depth analysis shall be made by test holes located in a random pattern with not less than 4 test holes in each test area. Test areas shall be accepted when seventy-five (75) percent of the test holes are not less than 0.5 inch of the designated thickness, and when no individual test hole shows a deficient thickness or more than 1.0 inch.

Test areas that are not acceptable shall be brought into compliance by the addition or removal of base material. Added material shall be blended with the in-place base and re-compacted to the required density. Excess material shall be removed at the Contractor's expense, and shall be deducted from the pay quantities. If the City permits an excess thickness of base to remain in place, the amount of material in excess of the tolerances specified will not be included in the pay quantity.

The finished sub-base shall be maintained to line and grade, and at the specified density until covered by a base or surface course. Any sub-base that becomes soft, washboarded or distorted under public or construction traffic shall be scarified, watered, remixed, and recompacted at the Contractor's expense.

4.9 ASPHALT MATERIALS

4.9.1 Description:

A. Asphalt Material: Asphalt of the grade specified shall fully comply with all of the requirements hereinafter set forth for each respective grade.

   The particular grade or grades of asphalt to be used on any project will be those called for in the Contract Documents. Each shipment of bituminous materials shall be uniform in appearance and consistency, and shall show no foaming when heated to the specified loading temperature. Shipments contaminated with other asphalt types or grades than specified shall be rejected.

B. Bill of Lading: The vendor of the bituminous material shall prepare a bill of lading for each shipment of material showing the following information:

   1. Type and grade of material
   2. Whether additives have been used and, if so, the type and amount
   3. Destination
   4. Consignee's name
   5. Date of shipment
   6. Railroad car or truck identification
   7. Project number for which shipped
   8. Loading temperature
   9. Net weight (or net gallons corrected to 60°F., when requested)
   10. Specific gravity
   11. Bill of lading number
   12. Source of bituminous material (manufacturer)

The vendor's bill of lading shall be prepared in triplicate, one copy to accompany the shipment to be delivered to the project, one copy to be mailed to the City, and one copy to be mailed to the designated testing laboratory.

C. Asphalt Cements: Penetration grades of asphalt cement prepared from petroleum shall conform to the requirements of Utah State Road Standard Designation AC-10 or AC-20 when available, except that minimum flash point for all grades shall be 350°F.

D. Catalytically-Blown Asphalt: Shall be prepared only by the catalytic-blowing treatment of petroleum asphalt. The asphalt shall be homogeneous, free from water and shall not foam when heated to 347°F. Asphaltic materials for which ferric chloride or other compounds of iron have been used as catalysts in the blowing operation will not be acceptable.

   Catalytically-blown asphalt shall meet the requirements of the "State of Utah Standard Specifications for Road and Bridge Construction."

E. Asphalt Emulsions: Emulsified asphalt shall conform to the requirements of ASTM of ISSA Specifications, for type SSlh, CSSlh or QUICK SETTING, MIXED GRADE EMULSION.

F. Slow Curing Cut Back Asphalt (SC): Shall conform to the requirements of AASHTO M-141.

G. Medium Curing Cut Back Asphalt (MC): Shall conform to the requirements of AASHTO M-82.

H. Rapid Curing Cut Back Asphalt (RC): Shall conform to the requirements o AASHTO M-8 , except that RC-4000 shall conform to the requirements shown in the "State of Utah Standard Specifications for Road and Bridge Construction."

I. Deep Penetration Liquid Asphalt: Requirements of deep penetration liquid asphalt shall meet the "State of Utah Standard Specifications for Road and Bridge Construction."

J. Road Tars: Shall be derived from gas-house, coke-oven, or water gas tars and shall conform to the requirements of AASHTO M-52.

K. Unauthorized Grades: The use of grades of asphalt other than those called for on the Approved Plans or in the Special Conditions will not be allowed. Any work which proves to be defective because of the use of unauthorized grades of asphalt shall be repaired or removed at the expense of the Contractor, if ordered by the City.

4.10 BITUMINOUS SURFACE COURSE

4.10.1 Description: These Specifications apply to pavements constructed of asphalt concrete in one or more sources and include bases, surface courses and wearing surfaces. The number of courses in the pavement cross section shall be as shown on the Approved Plans or designated in the Special Conditions.

Unless otherwise specified in the Special Conditions, the Contractor shall furnish all asphalt and mineral aggregates, mineral filler and blending sand as may be required and perform all mixing, hauling, spreading, compacting and other work necessary to complete an asphalt concrete pavement in accordance with these Specifications.

All materials to be used in the manufacture of bituminous surface courses shall be tested and the results shall be submitted to the City a minimum of 48 hours prior to incorporating them as part of the contract. Approval by the City of the materials and test results shall be obtained by the Contractor or the work may be rejected by the City.

4.10.2 Materials:

A. Bituminous Material: The bituminous material shall be the specified asphalt cement conforming to the requirements of Section 4.9. The grade specified in the proposal may be changed one step by the Project Engineer.

B. Mineral Aggregate: Mineral aggregate shall consist of crushed stone, crushed gravel, or crushed slag conforming to the following requirements:

1. Coarse aggregate, retained on the No. 4 sieve, shall consist of clean, hard, tough, durable and sound fragments, with not more than 3 percent by weight of flat, elongated, soft, or disintegrated particles, and shall be free from vegetable matter or other deleterious substances.

2. In addition, that portion of the aggregate retained on the No. 4 sieve shall have not less than 50 percent of particles by weight with at least one mechanically fractured face, or clean angular face, when tested in accordance with the Utah Department of Transportation Test Procedure 8-929.

3. Fine aggregate passing the No. 4 sieve, may be either a natural or manufactured product. The aggregate shall be clean, hard grained and moderately sharp, and shall contain not more than 2 percent by weight of vegetable matter or other deleterious substances.

4. That portion of the fine aggregate; passing the No. 40 sieve shall be non-plastic when tested in accordance with AASHTO T-90.

5. The weight of minus 200 mesh material retained in the aggregate, as determined by the difference in percent passing a No. 200 sieve by washing and dry sieving without washing shall not exceed 6 percent of the total sample weight.

The portion of the fine aggregate passing the No. 200 sieve shall be determined by washing with water in accordance with AASHTO T-11.

6. The aggregate shall be of uniform density and quality and shall have a rodded weight of not less than 75 lbs. per cubic foot when tested in accordance with AASHTO T-19.

7. The aggregate shall have a percentage of wear not exceeding 40 when tested in accordance with AASHTO T-96.

8. The mineral aggregate, when mixed with the bituminous binder specified for the project, shall have a swell not exceeding 0.030 inch when tested in accordance with AASHTO T-101, Method A. When the mineral aggregate is mixed with SC-250, the swell shall not exceed 0.062 inch, when tested in accordance with AASHTO T-101, Method B.

9. The aggregate shall have a weighted loss not exceeding 16 percent by weight when subjected to five cycles of sodium sulfate and tested in accordance with AASHTO T-104.

10. The aggregate shall be of such nature that when thoroughly coated with the bituminous material specified for the project, not less than 90 percent of the coating shall be retained when tested in accordance with Test Procedure 8-945 of the Manual of Instruction of UDOT. If the aggregate does not meet this requirement, bituminous additive shall be used to increase the percentage of retained bituminous material. The type and percent of additive to be used shall be approved by the Engineer. Bituminous additive shall conform to the requirements of Section 407 of the UDOT Standard Specifications for Road and Bridge Construction. When the aggregate is thoroughly coated with the bituminous material it will have an unconfined compressive strength of not less than 150 psi when tested in accordance with the requirements of Group 2 samples, AASHTO T-165, except that the mixing and compacting temperatures shall be in accordance with ASTM D-1559. Hydrated lime may be used to increase the unconfined compressive strength of the bituminous mix when this strength is below specification. The amount of lime to be used shall be approved by the Engineer.

11. The combined material aggregate plus any specified additives, when mixed with the specified bituminous binder in accordance with ASTM D-1559, shall conform to the following requirements:

Marshall stability	1200-2500 lbs.
Flow (0. 01 inch)	10-18
Voids content	3.0% to 5.0%
V.M.A.*	15.0% minimum

The requirements specified in this subsection shall be used to determine the suitability of the aggregate sources and shall not be used for routine project control except for items (a), (b), (c), and (d).

* Note: Voids in V.M.A. shall be determined by use of AASHTO T-209 and methods shown in the Asphalt Institute's Manual Series No. 2 (MS-2).

12. The bituminous surface course material shall have a coefficient of thermal expansion of less than ½ inch per 100 feet. When tested by the UDOT testing procedure, this requirement shall be used to determine the suitability of the aggregate source and shall not be used for routing project control. The Materials and Research Section or District One Materials and Test Unit may be contacted for information regarding this test method and specification.

C. Gradation: The combined dry mineral aggregate shall be uniformly graded and of such size that it meets one of the gradations specified in Subsection D, when tested in accordance with AASHTO T-30. The gradation to be used shall be at the option of the Contractor, unless otherwise specifically designated in the Contract Documents or by the Engineer, except that the top lift of bituminous surface course shall utilize aggregate of which 100% passes the l/2" sieve, unless otherwise approved by the City. When a specific gradation is designated, none other shall be used, unless authorized in writing by the Project Engineer. The maximum size of aggregate shall not be more than one-half the thickness of the compacted course to be constructed.

The Contractor shall establish a mix gradation, which meets the requirements of the chosen gradation band. At least 10 working days prior to producing bituminous surface course, the Contractor shall submit in writing a job-mix gradation to the Project Engineer for his approval. The job-mix gradation furnished shall be based on the material already stockpiled. The job-mix gradation shall have definite single values for the percentage of aggregate passing each specified sieve based on the dry weight of the aggregate.

Changes in the job-mix gradation may be made prior to a day's production subject to approval by the Project Engineer who, before use, will make necessary adjustments in the amount of bituminous material to be used. The request for change shall be in writing and shall give the City sufficient notice to review the change mix design. For major changes in the job-mix gradation at least three (3) working days notice shall be required. The Project Engineer will be furnished laboratory data to aid in selecting a mix gradation. The established mix gradation curve shall be reasonably parallel to the limits of the chosen gradation band.

The asphalt content of the mix shall be 4.5% to 5% or as approved by the City and shall be maintained with a tolerance of ± 0.4 percentage points.

D. Sampling and Testing: Acceptance of bituminous mixes with respect to gradation and bitumen content shall be based on the average gradation of 5 samples taken from a test lot, determined in accordance with the Utah Department of Transportation Test Procedure 8-947. A test lot shall not exceed 5000 tons of bituminous mix. Test samples shall be taken as the bituminous mix is being placed and shall be obtained from the roadbed immediately behind the paver prior to any further processing or compaction.

The locations to be sampled shall be chosen by the City.

A test lot shall be accepted for gradation when the average gradation of the five samples is within the gradation tolerances specified below, and when the number of individual samples outside the gradation tolerances does not exceed the following:

1", 3/4", 1/2", 3/8" Sieves	not more than 3 samples
No.'s 4, 8, and 16 Sieves	not more than 1 sample
No. 's 50 and 200 Sieves	not more than 1 sample

1" Gradation

Sieve Size	Ideal Gradation	Ideal Gradation Tolerance
1"	100	0
1/2"	83	±8
No. 4	54	±7
No. 16	28	±5
No. 50	17	±5
No 200	7	±2

3/4" Gradation

Sieve Size	Ideal Gradation	Ideal Gradation Tolerance
3/4"	100	0
3/8"	83	±8
No. 4	54	±8
No. 16	28	±6
No. 50	17	±6
No 200	7	±2

1/2" Gradation

Sieve Size	Ideal Gradation	Ideal Gradation Tolerance
1/2"	100	0
No. 4	70	±10
No. 16	35	±7
No. 50	17	±6
No 200	7	±2

4.10.3 Construction Details:

A. Preparation of Roadway:

1. Preparation of Asphalt, Concrete or Brick Surfaces: Before construction of an asphalt concrete pavement on an existing surface, all fatty asphalt patches, grease drippings, and other objectionable matter shall be entirely removed from the existing pavement. All excess asphalt joint filler shall be completely removed and all premolded joint filler shall be removed to at least one-half inch (1/2") below the surface of the existing pavement. All types of existing pavement or bituminous surfaces shall be thoroughly cleaned by sweeping to remove dust and other foreign matter.

   When asphalt concrete pavement is to be constructed over an existing paved or oiled surface, in addition to the preparation as outlined hereinbefore, all holes and depressions shall be filled with an appropriate class of asphalt concrete mix by hand shoveling. The surface of the area shall be leveled and compacted thoroughly, to the satisfaction of the City.

2. Preparation of Untreated Roadway: The existing roadway surface, including intersections and side street approaches, shall be shaped to a uniform grade and section shown on the Approved Plans, or as directed by the Project Engineer.

   The material on the existing street shall be loosened to a depth of approximately one inch, scarifying if necessary. The material shall be drifted back and forth across the street, evenly distributed and compacted into an unyielding mass by blading, rolling, and watering. The grade shall be shaped so that all frame castings for manholes, monument boxes, gate valve boxes, catch basins, etc. within the roadway section to be treated, will extend one-half to one inch below the finished surface. Where valves boxes or manhole frames must be adjusted in elevation to match the proposed finish asphalt grade, that adjustment must be made prior to placing asphalt unless otherwise approved by City. Where existing oil mats are to be met, they shall be thoroughly swept and cleaned to provide proper connections,

as the Project Engineer may direct.

The prime coat shall be applied in accordance with Section 4.11.

After the maintenance, patching or repair work has been completed and immediately prior to placing the bituminous pavement, the surface of the prime coat shall be swept clean of all dirt, dust, or other foreign matter.

3. Removing Existing Pavement: Where shown on the Approved Plans or where designated by the Project Engineer, the existing pavement of the type shown on the Approved Plans shall be broken up, loaded, hauled, and disposed of in accordance with requirements outlined in "Removal of Existing Street Improvements."

B. Connections With Existing Facilities: Where the bituminous pavement is to be connected with an existing roadway surface, bridge, railway crossing or other facility the Contractor will be required to modify the existing roadway profile in such a manner as to produce a smooth riding transition to the existing facility.

Where it is necessary to remove existing asphalt surfaces or oil mat surfaces to provide proper meet lines and riding surfaces, the Contractor shall burn or chip the existing surface so that there will be sufficient depth to provide a minimum of one (1) inch of asphalt concrete, and the waste material shall be disposed of to the satisfaction of the Project Engineer. Prior to placing the asphalt concrete, these areas shall be tacked in accordance with requirements described in Section 4.13. Meet lines shall be straight and the edges shall be vertical. The edges of meet line cuts shall be painted with diluted cutback asphalt or SS-1 emulsion prior to placing asphalt concrete. After placing the asphalt concrete, the meet line shall be sealed by painting with a cutback asphalt or SS-1 emulsion and immediately covered with clean dry sand.

C. Construction Methods and Equipment: The methods employed in performing the work, all equipment, tools and machinery and other appliances used in handling the materials and executing the work shall be the responsibility of the Contractor. The Contractor shall make such changes in the methods employed and in the equipment used as are necessary whenever the bituminous surface being produced does not meet these Specifications.

D. Temperature Control: The viscosity of the asphalt as it is being used in the pugmill shall be between 150 and 300 centistokes, determined in accordance with ASTM D-2170.

The Contractor shall advise the City in writing of the source of the asphalt to be used, who will then approve the temperature limits for the asphalt, aggregate, mixing, and laydown provided all the information required in Section 4.11.1 has been previously submitted and approved.

In the event a dryer-drum mixing process is used, the temperature of the bituminous mixture at discharge from the mixer shall be not less than 230°F. nor more than 260°F. It is necessary to complete compaction of the bituminous mixture before the temperature of the mixture drops below 180°F. It is necessary to cover haul trucks with tarpaulins and to deliver the mixture to the site before the mix temperature drops below 200 °F. unless an exception is approved by the City.

If the source of asphalt is changed during the course of the work, notice shall be given in writing to the City. A new mix design shall be made, and new temperature limits will be specified before asphalt from the new source is used. In no case shall the asphalt from two different sources be intermixed.

E. Prime Coat or Tack Coat: If a prime coat or a tack coat is required, it shall be placed in accordance with Section 4.12 or Section 4.13, whichever is applicable.

F. Mixing: The mineral aggregate shall be dried prior to mixing. Drying shall be accomplished in a suitable drier and shall continue until the average moisture content is not more than 1% by weight. Moisture determinations shall be made on samples taken from the drier discharge. Flames used for drying and heating shall be properly adjusted to avoid damage to the aggregate and to avoid contamination of the aggregate by soot or fuel oil.

The mineral aggregate and bituminous binder shall be mixed at a central mixing plant. The shortest mixing time consistent with satisfactory coating of the aggregate shall be used as approved by the Engineer. The mineral aggregate shall be considered satisfactorily coated with bitumen when all of the particles passing the No. 4 sieve and 96% of the particles retained on the No. 4 sieve are coated as determined visually by the Project Engineer. The required mixing time, as determined above, shall be used until changed by the Project Engineer.

If a dryer-drum mixing process is used, the dryer-drum mixing system shall be equipped to provide positive control of the cold aggregate feed and automatically regulate the feed gate and permit instant correction of variations in load. The cold feed shall be automatically coupled with the bitumen flow to maintain the required proportions. The system shall be equipped with automatic burner controls and shall provide for temperature sensing of the bituminous mixture at discharge. The mixing system shall be equipped with an adequate and approved surge bin capable of dumping into hauling units. The surge bin shall be loaded in such manner as to prevent segregation of the mix.

Dumping on the ground and reloading of the bituminous mix shall not be permitted. A mixing time consistent with satisfactory coating of the aggregate shall be used. The mineral aggregate shall be considered satisfactorily coated with bitumen when all of the particles passing the No. 4 sieve and 98% of the particles are retained on the

No. 4 are coated as determined by the Project Engineer. The moisture content of the bituminous mixture sampled behind the laydown machine prior to compaction shall not exceed 1% by weight.

G. Spreading: Each course of the pavement shall be spread with a mechanical, self-propelled spreading and finishing machine capable of at least a 12-foot width. It shall be equipped with a screed or cutoff device that oscillates in a horizontal motion or vibrates vertically when striking off the course or lift under construction. The mixture shall be spread and stuck-off in such a manner that the finished surface shall conform to the elevations, grades and cross-sections shown on the Approved Plans or as designated by the Project Engineer.

The spreading machine shall be operated in such a manner as to distribute the mixture to proper cross-section, width, and thickness without segregation of aggregates. The spreading machine shall leave the mixture uniformly dense throughout, smooth, and free from inequalities and irregularities.

The spreading machine shall be capable of placing a uniform layer of asphalt mix to the depth shown on the Approved Plans or ordered by the Project Engineer. Unless otherwise designated or directed, bituminous base course more than 3 inches in total compacted thickness shall be spread in two or more courses, with no course exceeding 3-inches in compacted thickness.

The placing and compacting of bituminous base course in any given lane, shall not precede the placing and compacting of bituminous base course in any adjacent lane by more than one hour. When weather or other conditions are unfavorable, the amount of time between placing in adjacent lanes shall be reduced, as required by the Project Engineer.

Longitudinal joints in succeeding courses shall be offset at least 6 inches transversely to avoid a vertical joint through more than one course.

Areas which are inaccessible to the spreading machine may be paved by other methods, as approved by the Engineer. When ordered by the Engineer, motor patrol graders or approved types of truck-attached spreaders shall be used to pave inaccessible or irregularly shaped areas. Hand raking shall be kept to a minimum.

H. Compaction: After the mixture has been spread, the surface shall be rolled in longitudinal direction commencing at the outside edge or lower side and preceding to the higher side. Each pass of the roller shall overlap the preceding pass at least one-half the width of the roller. Rolling shall continue until 98% of the laboratory density as determined in accordance with ASTM D-1559 for the bituminous mixture being used has been obtained, except that 97% density is allowable for new road construction subject to the approval of the City.

All rollers shall be in good condition, and the reversing mechanism so maintained that the roller is capable of changing directions smoothly. The roller shall be kept in continuous motion while on the hot mat in such a manner that all parts of the pavement receive equal compression. Reversing should not be done until the roller has completely stopped. Rollers shall be operated by competent and experienced personnel.

Areas inaccessible to the roller shall be compacted by tamping with mechanical or hand tampers.

The surface of the mixture after compaction shall be smooth and true to established section and grade. Any mixture which shows an excess or deficiency of asphalt, or uneven distribution of asphalt due to insufficient mixing, or which becomes loose, broken, raveled, mixed with dirt, or is in any way defective, shall be removed and replaced with fresh hot mixture at the Contractor's expense, and be immediately compacted to conform with the surrounding area. Areas of one square foot or more showing an excess or deficiency of asphalt shall be removed and replaced.

Acceptance of the surface course with respect to density shall be based on the average density of 4 determinations made in a test area. A test area shall not exceed 2500 feet in length and shall be the full width of the course being placed. The location of test sites within a test area shall be chosen on a random basis at the Engineer's discretion. The in-place field density may be determined by any one of the methods selected by the Engineer.

The test area shall be accepted when the average of the 4 density determinations is not less than 97.5% of maximum laboratory density and when no determination is lower than 95% of maximum laboratory density. The maximum laboratory density shall be determined in accordance with Utah Department of Transportation Test Procedure 8-942.

I. Finishing: The surface course shall be finished to a smooth uniform line and grade with surface deviations not exceeding 1/8 inch, plus or minus, in 10 feet. The determination of compliance with smoothness may be made with a straight-edge, chalk line, high-low detector, or profilograph at the option of the Engineer. Surface ridges and irregularities shall be eliminated by rolling or other approved methods. The use of any equipment that leaves defects in the finished surface which cannot be eliminated, shall be discontinued.

When tested longitudinally, parallel to the surface, the surface shall not vary more than the following:

Length of Section	Leveling or First Course	Second or Surface Course

10 feet	1/4 inch	1/8 inch
25 feet	3/8 inch	1/4 inch
50 feet	1/2 inch	3/8 inch

Any variation from specified tolerance shall be corrected, at the expense of the Contractor, in a manner satisfactory to the Project Engineer.

The average thickness of the completed surface course shall be reasonably close to that shown on the typical sections. Acceptance of the completed surface course with respect to thickness shall be on the basis of test areas selected by the Engineer, not to exceed 50,000 square feet in size. Depth analysis may be made by cores located in a random pattern, with not less than 4 cores in each test area. The test area shall be accepted when seventy-five (75) percent of the cores are not more than ½ inch greater nor 3/8 inch less than the specified thickness and when no core shows a deficient thickness of more than 3/4 inch.

Test areas that are not acceptable because of deficient thickness shall be brought into compliance by placing additional surface course as directed by the Engineer.

Test areas that are not acceptable because of excess thickness shall be corrected as directed by the Engineer. Removal of portions of the surface course, if required, shall be at the Contractor's expense, and the amount of material removed shall be deducted from pay quantities. If the Project Engineer permits an excess thickness of surface course to remain in place, the amount of material in excess of the tolerances specified will not be included in the pay quantities.

The thick tolerances established above shall not apply to those areas where additional thickness is required for leveling an existing surface.

J. Miscellaneous Details of Construction: Construction of one course or lift upon another shall not proceed until the underlying course has completely cooled and set, unless otherwise approved by City.

Where the asphalt concrete is to be placed against a concrete or stone curb or gutter, or against a cold pavement joint, or against any metal surface such as manhole rings or valve boxes, a tack coat shall be applied in advance of the placing. The application shall be thin and uniform, care being exercised to avoid accumulation of asphalt in depressions or upon portions of the curb or gutter not requiring the application. The tack coat shall be in accordance with Section 4.13.

No traffic other than that necessary for construction purposes shall be allowed on any course of the pavement until the course has completely cooled and set.

K. Weather and Seasonal Limitations: Bituminous surface course shall be placed only between April 15 and October 15 and when the air temperature in the shade and the

roadbed temperature are above 50°F and rising. Bituminous surface course shall not be placed during rain, when the roadbed is wet, or during other adverse weather conditions, as determined by the Project Engineer or the City. Bituminous surface course placed after October 15 shall be placed only upon written authorization from the City and then only when a proper review has determined that it is in the best interest of the City and the public.

L. Seal Coat: If a seal coat is required, it shall be placed in accordance with the requirements of Section 4.14.

M. Shoulders: The shoulders shall be finished to the lines, grades, and cross-sections shown in the Approved Plans or Special Conditions.

4.11 BITUMINOUS PRIME COAT

4.11.1 General: This item shall consist of an application of liquid or emulsified asphalt to a prepared subgrade or untreated base course preparatory to placing a bituminous base or surface course. The prime coat shall be applied in conformity with the Approved Plans and these Specifications or as designated by the City.

4.11.2 Bituminous Material: Bituminous material shall be MC 70 and shall conform to the requirements of Section 4.9.

The grade may be changed one step by the City Engineer.

4.11.3 Blotter Material: Blotter material, when required, shall consist of granular material that meets the following gradation requirements, when tested in accordance with AASHTO T-27:

Sieve Size	Percentage Passing Sieves
No. 4	90-100
No. 10	25-80
No. 200	0-15

4.11.4 Surface Preparation: If the surface to be primed contains an appreciable amount of loose material or is excessively dusty, it shall be wetted, bladed and rolled as approved by the Project Engineer, to make the surface satisfactorily tight. Priming shall not be started until all free surface moisture has disappeared.

4.11.5 Application of Bituminous Material: The bituminous material shall be sprayed over the prepared surface by means of a pressure distributor. The rate of application shall be approved by the Project Engineer.

The temperature range of the bituminous material at the time of application shall be such that the viscosity will be between 50 and 100 centistokes, as determined in accordance with ASTM D-2170. The exact temperature range shall be approved by the Project Engineer.

Where a surface is over primed, resulting in a film of free liquid asphalt, it shall be blotted by spreading a light, uniform layer of blotter material applied at a rate approved by the Project Engineer.

Blotter material shall be applied by means of an approved mechanical spreader, capable of depositing a uniform layer of blotter material applied at a rate approved by the Project Engineer.

An under primed surface shall immediately receive another application of bituminous material.

4.11.6 Protection of Structures: During the application of bituminous material, all structures shall be protected from being spattered or marred by covering with building paper or other suitable materials. If any spattering or marring should occur, the condition shall be corrected at the expense of the Contractor.

Bituminous material shall not be discharged into borrow pits or gutters.

4.11.7 Opening to Traffic and Maintenance: If a roadway has been open to traffic at any time, its closure for application of prime coat must be coordinated with the City 48 hours in advance. After the prime coat has been applied, it shall be left undisturbed for at least 4 hours. If after this time the surface is tacky or tends to pick up under traffic, the excess bituminous material shall be blotted with blotter material, before the surface is opened to any kind of traffic. The Contractor shall maintain the primed surface until the next course is placed. Maintenance shall include spreading any necessary additional blotter material, replacing all portions of prime coat that have been destroyed, and patching any breaks in the primed surface. Any primed area that has become fouled by traffic, or otherwise, shall be cleaned before the next course is placed.

Under no circumstances should traffic be permitted to travel over freshly primed surface. If detours cannot be provided, the Contractor shall restrict his operation to a width that will permit at least one-way traffic over the remaining portion of the roadbed. If one-way traffic is provided, the traffic shall be controlled by flagging or pilot car operation.

4.11.8 Weather and Limitations: Prime coat and tack coat shall be applied only when the air temperature in the shade is above 50°F and the roadbed temperature is above 50°F. Prime coat and tack coat shall not be applied during rain, fog, or other adverse weather conditions.

The temperature restrictions may only be waived upon written authorization by the City.

4.12 BITUMINOUS TACK COAT

4.12.1 General: This item shall consist of an application of liquid asphalt or emulsified asphalt to an existing surface applied in conformity with the Approved Plans and these Specifications or as directed by the City.

4.12.2 Materials: Bituminous material shall be RC 70 and shall conform to the requirements of Section 4.

4.12.3 Application of Bituminous Material: Prior to applying the material, the surface to be treated shall be swept or flushed free of dust or other foreign material. The material shall then be sprayed over the prepared surface by means of a pressure distributor at the rate approved by the Engineer.

The temperature range of the bituminous material at the time of application shall be such that the viscosity will be between 50 and 100 centistokes, as determined in accordance with ASTM Designation D-2170. The exact temperature range shall be approved by the Project Engineer.

4.12.4 Protection of Structures: Structures shall be protected as provided in Subsection 4.11.6.

4.12.5 Opening to Traffic: Under no circumstances shall traffic be permitted to travel over the tacked surface until the bituminous material has cured so as to not be picked up by traffic. If detours cannot be provided, the Contractor shall restrict his operation to a width that will permit at least one-way traffic over the remaining portion of the road. If one-way traffic is provided the traffic shall be controlled by flagging or pilot car operation.

4.12.6 Weather Limitations: The application of tack coat shall be subject to the conditions outlined in Subsection 4.11.8.

4.13 BITUMINOUS SEAL COAT

4.13.1 General: This item shall consist of applying a coat of liquid asphalt to an existing surface course. When required, an application of cover material shall follow the bituminous application. The seal coat shall be applied in conformity with the Approved Plans and these Specifications or as directed by the Project Engineer.

4.13.2 Bituminous Material: The bituminous material shall be RC 70, conforming to the requirements of Section 4.9.

4.13.3 Cover Material: Cover material shall consist of clean, hard, tough, durable, and sound fragments of broken stone' crushed gravel, or crushed lag conforming to the following requirements:

A. The dry mineral aggregate shall be uniformly graded with one of the gradation limits specified below, as is called for in the bid proposal, when tested in accordance with AASHTO T-27.

Percentage Passing Sieves

Sieve Size	Type A	Type B
1/2 inch	100	
3/8 inch	90-100	
No. 4	10-25	100
No. 8	0-10	85-100
No. 16	0-6	10-25
No. 50	0-4	0-5
No. 200	0-2	0-2

Acceptance of cover material with respect to gradation shall be based on the average gradation of 5 samples taken from a test lot of 500 tons. The samples shall be obtained from the stockpile prior to use. A test lot shall be accepted when the average gradation of the 5 samples is within the specified gradation band and when the number of individual samples in each test lot outside the gradation band does not exceed 2 and when they are not outside the band by more than 2 percentage points on any one sieve.

The total amount of material passing the No. 200 sieve shall be determined by washing with water in accordance with AASHTO T-11.

B. That portion of the aggregate retained on the No. 4 sieve shall have not less than 90 percent, by weight, of particles with at least two mechanically fractured, or clean angular faces, when tested in accordance with the Utah State Department of Transportation Test Procedure 8-929.

C. The aggregate shall have a percentage of wear not exceeding 30, when tested in accordance with AASHTO T-96.

D. The crushed mineral aggregate shall have a weighted percent of loss not exceeding 10 percent by weight, when subjected to five cycles of sodium sulfate and tested in accordance with AASHTO T-104.

E. The aggregate shall be of such nature that when the particles are thoroughly coated with the bituminous material specified for the project, not less than 90 percent of the coating shall be retained, when tested in accordance with Utah State Department of Transportation Test Procedure 8-945.

4.13.4 Construction Methods:

A. Bituminous Additive: Bituminous additive may be used to improve the coatability of the aggregate. The amount and type of additive to be used shall be approved by the Project Engineer.

B. Surface Preparation: Seal coat operations shall not be started until the surface to be sealed has been thoroughly compacted by traffic. In no event shall seal coat be placed on newly constructed bituminous surfaces within 7 days after such surfaces are laid.

   Prior to placing the seal coat, the existing surface shall be cleaned of all dirt, sand, dust, or other objectionable material.

C. Application: The material shall be sprayed over the prepared surface by means of a pressure distributor. The material shall be applied in such a manner that an inspection of the spread can be made and any defects corrected before the cover material is applied. The rate of application shall be approved by the Project Engineer. Application of bituminous material shall not be more than 1000 feet in advance of the placing of cover material.

   Joints between applications shall be made by starting and stopping the distributor on building paper. Valve action shall be instantaneous, both in starting and cutoff. The distributor shall attain the proper application speed at the time the spray bar is opened.

   The temperature range of the bituminous material at the time of application shall be such that the viscosity will be between 50 and 100 centistokes, as determined in accordance with ASTM D-2170. The exact temperature range shall be approved by the Project Engineer.

D. Spreading and Compacting of Cover Material: The cover material shall be spread immediately after applying the bituminous material by means of an approved spreader, which can be adjusted to uniformly spread the required amount of aggregate. Provisions shall be made so that the larger particles will be deposited first. The rate of cover material application, in pounds per square yard, shall be approved by the Engineer. Immediately after spreading, the cover material shall be hand broomed, if necessary, to distribute the aggregate uniformly over the surface.

   After the cover material has been satisfactorily spread, the surface shall be rolled in a longitudinal direction. Rolling, performed with pneumatic tire rollers, shall adequately seal the cover material and shall consist of at least two complete passes. Rolling shall be completed the same day the bituminous material and cover material are applied.

   After rolling, but not earlier than the next day, any loose material shall be redistributed over the surface. At the end of four days, any excess material shall be removed in such a manner that the material set in the bituminous binder will not be

dislodged.

E. Protection of Structures: Structures shall be protected as provided in Subsection 4.11.6.

F. Opening to Traffic: On completion of final rolling, traffic shall be permitted to travel over the seal coat. Traffic shall be controlled as directed by flagging and pilot car operation.

G. Weather Limitations: Seal coat shall be applied only when the air temperature in the shade and the roadbed temperatures are above 50°F. Seal coat shall not be applied during rain, fog, or other adverse weather conditions.

   The temperature restrictions may only be waived upon written authorization from the Project Engineer.

H. Supplemental Cover Material: Cover material shall be stockpiled at the designated places in such quantities as contained in the bid proposal or as the Project Engineer may direct. Prior to stockpiling, the selected sites shall be cleared and leveled.

4.14 PLANT MIX BITUMINOUS SEAL COAT

4.14.1 Description: This item shall consist of a mixture of mineral aggregate and bituminous binder, mixed at a central mixing plant, spread and compacted on a prepared surface in reasonably close conformance with the lines, grades and dimensions shown on the Approved Plans and typical sections and in accordance with these Specifications.

4.14.2 Materials:

A. Bituminous Material: Bituminous material shall be of the type called for in the Approved Plan. The grade specified on the Plan may be changed one step by the Project Engineer. The percentage of bituminous material used shall be approved by the Project Engineer.

B. Mineral Aggregate:

   1. The dry mineral aggregate shall meet one of the gradations shown below when tested in accordance with AASHTO Designation T-30. The gradation to be used shall be designated in the Proposal.

      At least ten working days prior to producing plant mix bituminous seal coat, the Contractor shall submit in writing a job-mix gradation to the Engineer for his approval. The job-mix gradation shall have definite single values for the percentage of aggregate passing each specified sieve based on the dry weight of the aggregate. The job-mix gradation shall meet the ideal gradation with the

tolerances shown below:

Type A

Sieve Size	Ideal Gradation (Percent Passing)	Ideal Gradation Tolerance
½ inch	100	0
3/8 inch	97	±2
No. 4	40	±4
No. 8	17	±3
No. 16	12	±2
No. 50	8	±2
No. 200	3	±1

Type B

Sieve Size	Ideal Gradation (Percent Passing)	Ideal Gradation Tolerance
½ inch	100	0
3/8 inch	97	±2
No. 4	40	±4
No. 8	17	±3
No. 16	21	±3
No. 50	13	±2
No. 200	4	±1

The total amount of material passing the No. 22 Sieve shall be determined by washing with water in accordance with AASHTO T-11.

Changes in the job-mix gradation may be made prior to a day's production, subject to approval by the Project Engineer who, before use, will make any necessary adjustments in the amount of bituminous material to be used. The request for changes shall be in writing and shall give the Project Engineer sufficient notice to review and approve his mix design. For major changes in the job-mix gradation, at least two working days notice shall be required.

Acceptance of the aggregate with respect to gradation shall be based on the average of the deviations from the job-mix gradation of the samples taken from a lot. A lot shall equal the number of tons of bituminous mix placed each production day. When the daily production exceeds 2,500 tons, a minimum of 5 samples shall be required. When it is between 1,500 and 2,500 tons, a minimum of 4 samples shall be required. When it is less than 1,500 tons, a minimum of 3 samples shall be required. In the event the minimum number of samples required cannot be obtained, the test lot may be evaluated on the basis of fewer samples.

The samples shall be taken on a random basis from the bituminous mix after it has been discharged into hauling units. In addition, the samples shall be distributed as uniformly as possible in time throughout the test lot so as to be representative of the material being produced during the entire production day. A lot will be accepted when the average gradation of the 5 samples is within the specified gradation band and when the number of individual samples in each test lot outside the band does not exceed 2 and when they are not outside the gradation band by more than 2 percentage points on any one sieve.

The Contractor shall take steps to bring the plant mix bituminous seal coat into Specifications when the test results show a deviation from the job-mix formula that exceeds the maximum deviation allowed.

2. That portion of the aggregate retained on the No. 4 sieve shall have not less than 90 % of particles with at least one fractured face, or clear angular face, when tested in accordance with UDOT Test Procedure 8-929.

3. The aggregate shall have a percentage of wear not exceeding 30 when tested in accordance with AASHTO T-96.

4. The crushed mineral aggregate shall have a weighted percent of less not exceeding 12% by weight when subjected to 5 cycles of sodium surface and tested in accordance with AASHTO T-104.

5. The aggregate shall be of such nature that when thoroughly coated with the bituminous material specified for the project not less than 90% of the coating shall be retained when tested in accordance-with UDOT Test Procedure 8-945.

6. Before being fed to the drier, the aggregate shall be separated into two or more sizes and stored separately. If two or three sizes are used, the aggregate shall be separated on screens of such size that the quantity drawn from each storage area is approximately equal.

   The aggregate shall be fed to the drier at a uniform rate. The rate of feed shall be maintained within 10% of the amount set by the Contractor for his operation.

   In placing the aggregate in storage or in moving from storage to the cold feed bins, any method which causes segregation, degradation, or the combining of materials of different gradations shall not be permitted. Any segregated or degraded material shall be re-screened or wasted.

   Plant mix operations shall not commence until sufficient material for at least two days production has been separated and stockpiled.

7. The plant mix bituminous seal coat material shall have a co-efficient of thermal

expansion of less than ½ inch per 100 feet when tested by the UDOT testing procedure. This requirement shall be used to determine the suitability of the aggregate source and shall not be used for routing project control. The materials and Research Section or District One Materials and Test Unit may be contacted for information regarding this test method and specification.

C. Bituminous Additive: Bituminous additive may be used to improve adhesion of the aggregate. The type and percent of super-concentrated additive to be used shall be approved by the Project Engineer. Bituminous additive shall conform to the requirements of Section 407 of the UDOT Standard Specifications for Road and Bridge Construction.

4.14.3 Construction Methods:

A. Temperature Control: The viscosity of the asphalt being used in the plant mix bituminous seal coat shall be between 400 and 900 centistokes at the time of mixing as determined in accordance with ASTM D-2170 of the UDOT Standard Specifications for Road and Bridge Construction. The exact temperature range shall be approved by the Project Engineer to be used for the asphalt, aggregate, mixing and lay down after notification as to asphalt source.

If a dryer-drum mixing process is used, the temperature of the bituminous mixture at discharge from the mixer shall be not less than 230°F. nor more than 260°F. Unless otherwise approved by City, the plant mix bituminous seal coat must be covered with a tarpaulin and delivered to the site before its temperature drops below 200 °F. It is necessary to complete compaction of the bituminous mixture before the temperature of the mixture drops below 180°F. unless otherwise approved by City. If the source of asphalt is changed during the course of work, a new mix design shall be made. In no case shall the asphalt from two different sources be intermixed.

B. Mixing: Mixing shall be performed as specified in Standard Specifications for Road and Bridge Construction, except that the mineral aggregate shall be considered satisfactorily coated with bitumen when all particles are coated.

C. Tack Coat: The placing of the tack coat shall be in accordance with Section 404 of the UDOT Standard Specifications for Road and Bridge Construction.

D. Spreading and Compacting: The bituminous seal coat mixture shall be laid with self-propelled mechanical spreading and finishing equipment capable of laying at least a 12-foot width. The mixture shall be laid in one pass to the elevations, grades, and cross-sections shown on the Approved Plans.

Whenever asphalt slicks appear on the surface of the newly laid seal coat, they shall be raked immediately. Raking will usually cause the excessive asphalt to flow to the bottom of the mat. If a slick spot cannot be removed by raking, it shall be taken out

and replaced by material which contains less asphalt. This replacement material shall be raked to conform to the contour of the seal coat. Asphalt slicks which appear after rolling has been completed shall be covered with a light course of fine sand. The slick spots shall then be rolled again.

The seal coat shall be rolled in a longitudinal direction, commencing at the outside edge or lower side and proceeding toward the higher side. Rolling shall be accomplished with a flat-wheel steel roller weighing not more than 10 tons. Each pass of the roller shall overlap the preceding pass by at least one-half the width of the roller. Rolling shall be confined to the amount necessary to consolidate the seal coat and bond it to the underlying surface course. Excessive rolling shall be avoided.

Longitudinal joints shall be located within 6 inches of what will be a traffic lane-line location.

The completed seal coat shall be protected from all traffic until it has hardened and set up sufficiently to resist abrasion as determined by the Project Engineer.

Acceptance of the completed plant mix seal coat with respect to thickness shall be based on the average thickness of the test lot. A test lot shall equal the number of tons of bituminous mix placed each production day. A lot shall be divided into sublots of approximately 3,200 square yards. A minimum of one thickness test, randomly selected by use of a random number table, shall be taken within each sublot. A lot shall be accepted when the average thickness of all sublots is not more than 1/4-inch greater or 3/8-inch less than the total designated plant mix seal coat thickness.

Lots or sublots that are not acceptable because of deficient thickness shall be brought into compliance by placing a minimum of 3/4-inch additional plant mix seal coat to roadway or lane width at the Contractor's expense. Tapers shall be required on each end of the additional layer of plant mix seal coat. Tapers shall be constructed to the satisfaction of the Project Engineer.

In lots or sublots where the thickness exceeds the specified tolerance, 50% of the amount of material in excess of the specified tolerances shall be included in the pay quantities.

The Project Engineer will periodically check the depth of the plant mix bituminous seal coat with use of a depth probe. The Engineer, via his Inspector, will inform the Contractor or his lay down foreman/superintendent of any variance from the specified depth which exceeds 1/4-inch as soon as it is discovered. The Contractor will take immediate action to insure the plant mix bituminous seal coat thickness is adjusted to that specified on the Approved Plans.

Should the Project Engineer discover the depth of plant mix bituminous seal coat is less than 5/8-inch, he will direct the Contractor to take corrective action to add more

material to the deficient area to produce the specified depth.

If the Contractor elects to overlay while the mat temperature is above 180 degrees F. the total mat thickness must be at least that specified on the Approved Plans. Corrections made after the mat has cooled to below 180 degrees F. require an overlay of at least 3/4-inch.

E. Weather and Seasonal Limitations: Weather and seasonal limitations shall conform to Section 4.10.3K.

4.15 EMULSION SLURRY SEAL

4.15.1 Description: The slurry seal surface shall consist of a mixture of emulsified asphalt, mineral aggregate, and water; properly proportioned, mixed, and spread evenly on the surface as specified herein and as directed by the Project Engineer. The cured slurry shall have a homogenous appearance, fill all cracks, adhere firmly to the surface and have skid resistant texture.

4.15.2 Materials:

A. Asphalt Emulsion. The emulsified asphalt shall conform to the requirements of ASTM of ISSA Specification, for type SSlh, CSSlh or QUICK SETTING, MIXED GRADE EMULSION.

B. Aggregate. The mineral aggregate shall consist of natural or manufactured sand, slag, crusher fines, and others, or a combination thereof. Smooth-textured sand of less than 1.25 percent water absorption shall not exceed 50 percent of the total combined aggregate. The aggregate shall be clean and free from vegetable matter and other deleterious substances. When tested by AASHTO T-176 of ASTM D-2419, the aggregate blend shall have a sand equivalent of not less than 45. When tested according to AASHTO T10-4 or ASTM C-88 the aggregate shall show a loss of not more than 15%. When tested according to AASHTO T-96 or ASTM C-131 the aggregate shall show a loss of not more than 35.

Mineral fillers such as Portland Cement, limestone dust, fly ash, and other shall be considered as part of the blended aggregate and shall be used in minimum required amounts. They shall meet the gradation requirements of ASTM D-242. Mineral fillers shall be used if needed to improve the workability of the mix or gradation of the aggregate.

The combined mineral aggregate shall conform to the following gradation when tested:

Sieve Size	Percent Passing

½	
3/8	100
No. 4	70-90
No. 8	45-70
No. 16	28-50
No. 30	19-34
No. 50	12-25
No. 100	7-18
No. 200	5-15

Theoretical Asphalt	15%
Content % Dry	2%
Aggregate	17%
Acceptable Variance	+ 2%

C. Water. All water used with the slurry mixture shall be potable and free from harmful soluble salts.

4.15.3 Equipment: All equipment, tools and machines used in the performance of this work shall be maintained in satisfactory working order at all times. Descriptive information on the slurry mixing and applying equipment to be used shall be submitted to the City for approval not less than five (5) days before the work starts.

A. Slurry Mixing Equipment. The slurry mixing machine shall be a continuous flow mixing unit and be capable of delivering accurately a predetermined proportion of aggregate, water and asphalt emulsion to the mixing chamber and to discharge the thoroughly mixed product on a continuous basis. The aggregate shall be pre-wetted immediately prior to mixing with the emulsion. The mixing unit of the mixing chamber shall be capable of thoroughly blending all ingredients together. No violent mixing shall be permitted. The mixing machine shall be equipped with an approved fines feeder that provides an accurate metering device or method to introduce a predetermined proportioned of mineral filler into the mixer at the same time and location that the aggregate is fed. The fines shall be used whenever added mineral filler is a part of the aggregate blend.

B. Slurry Spreading Equipment. Attached to the mixer machine shall be a mechanical type squeegee distributor equipped with flexible material in contact with the surface to prevent loss of slurry from the distributor. It shall be maintained so as to prevent loss of slurry on curving grades and crown by adjustments to assure uniform spread. There shall be a steering device and a flexible strike-off.

The spreader box shall have an adjustable width. The box shall be kept clean, and build-up of asphalt and aggregate on the box shall not be permitted. The use of burlap

drags or other drags shall be approved by the City Engineer.

C. Cleaning Equipment. Power brooms, power blowers, air compressors, water flushing equipment, and hand brooms shall be suitable for cleaning the surface and cracks of the old surface.

4.15.4 Preparation of Surface: Immediately prior to applying the slurry, the surface shall be cleaned of all loose material, silt spots, vegetation, and other objectionable material. Any standard cleaning method used to clean pavements will be acceptable, except water flushing will not be permitted in areas where considerable cracks are present in the pavement surface. The City shall give final approval of the surface.

4.15.5 Composition and Rate of Application of the Slurry Mix: The amount of asphalt emulsion to be blended with the aggregate shall be that as determined by the laboratory report after final adjustment in the field. A minimum amount of water shall be added as necessary to obtain a fluid and homogeneous mixture. The rate of application shall be a minimum of 18 lbs. of dry aggregate per square yard.

4.15.6 Weather Limitations: The slurry seal surface shall not be applied if either the pavement or air temperature is 55° F. or below and falling, but may be applied when the air and also the pavement temperature is 45° F. or above and rising.

4.15.7 Application of the Slurry Surfaces:

A. General. The surface may be pre-wetted by fogging ahead of the slurry box. The slurry mixture shall be of the desired consistency when deposited on the surface and no additional elements shall be added. Total time of mixing shall not exceed four minutes. A sufficient amount of slurry shall be carried in all parts of the spreader at all times so that complete coverage is obtained. No lumping, balling or unmixed aggregate shall be permitted. No segregation of the emulsion and aggregate will be permitted. If the coarse aggregate settles to the bottom of the mix, the slurry will be removed from the pavement. No excessive breaking of the emulsion will be allowed in the spreader box. No streaks such as caused by oversized aggregate will be left in the finished pavement.

B. Joints. No excessive build-up or unsightly appearance shall be permitted on longitudinal or transverse joints.

C. Hand Work. Approved squeegees shall be used to spread slurry in non-accessible areas to the slurry mixer. Care shall be exercised in leaving no unsightly appearance from hand work.

4.16 PORTLAND CEMENT CONCRETE

4.16.1 Scope: This section of the specifications defines materials to be used in all Portland

cement concrete work and requirements for mixing, placing, finishing, and curing.

4.16.2 Materials: Materials used in Portland cement concrete and reinforcing of Portland cement concrete shall meet the following requirements:

A. Cement:

1. ASTM C-150, Type II (moderate). Type I may be used in above grade structure if approved.

2. An air-entraining agent shall be used in all concrete exposed to the weather. The agent shall conform to ASTM C-175 and C-260.

B. Water:

1. Clean, non-staining and non-detrimental. Comply with AASHTO T-26.

C. Aggregates - General:

1. Gravel, crushed slag, crushed stone, or other inert materials, composed of hard, strong durable particles free of injurious coatings. Complying with ASTM C-33 Specifications for Concrete Aggregate.

2. The materials passing the No. 200 sieve shall not exceed 1.75 percent by weight in the combined coarse and fine aggregate.

D. Coarse Aggregate:

1. Sieve Analysis: Graded in accordance with ASTM C-33, as indicated in Table No. 1.

2. Gradation limits of Table No. 1 may be changed if, in the judgment of the ENGINEER, workability and methods of consolidation are such that concrete can be placed without honeycomb or voids and the maximum aggregate size does not exceed the following requirements:

a. 1/5 of narrowest dimension between forms.

b. 1/3 of depth of slabs.

c. 3/4 of minimum clear spacing between reinforcing bars.

3. Deleterious Substances: Maximum percentage by weight.

a. Soft Fragments: 2.0 percent.

b. Coal and Lignite: 0.3 percent.

c. Clay Lumps: 0.3 percent.

d. Other Deleterious Substances: 2.0 percent.

TABLE 1

MASTER GRADING BAND LIMITS
FOR COARSE AGGREGATE

Sieve Sizes	COARSE AGGREGATE Percent Passing by Weight					
	Grade 467		Grade 57		Grade 67	
	Min	Max	Min	Max	Min	Max
2 inch	100	-	-	-	-	-
1-1/2 inch	95	100	100	-	-	-
1 inch	-	-	95	100	100	-
3/4 inch	35	70	-	-	90	100
½ inch	-	-	25	60	-	-
3/8 inch	10	30	-	-	20	55
No. 4	0	5	0	10	0	10
No. 8	-	-	-	5	0	5

E. Fine Aggregate:

1. Sieve Analysis: Graded in accordance with ASTM C-33, as follows:

TABLE 2

MASTER GRADING BAND LIMITS
FOR FINE AGGREGATE

Sieve Sizes	FINE AGGREGATE Percent Passing by Weight Min	Max
3/8 inch	100	-
No. 4	95	100
No. 16	45	80
No. 50	10	30
No. 100	2	10

2. Deleterious Substances: Maximum percentage by weight:

   a. Coal and Lignite: 0.3 percent.

   b. Clay Lumps: 0.5 percent.

   c. Other Deleterious Substances: 2.0 percent.

F. Soundness and Reactivity of Aggregate:

1. Determine coarse and fine aggregate soundness in accordance with ASTM C-88.

   a. For Coarse Aggregate: Weight loss; not exceeding 12 percent by weight when subjected to 5 cycles of sodium sulfate or 18 percent by weight when subjected to 5 cycles of magnesium sulfate.

   b. For Fine Aggregate: Weight loss; not exceeding 10 percent by weight when subjected to 5 cycles of sodium sulfate or 15 percent by weight when subjected to 5 cycles of magnesium sulfate.

2. Determine alkali-silica reactivity in accordance with ASTM C-289. Do not use aggregates determined either potentially or actually deleterious unless service records have shown the aggregates to be innocuous and ENGINEER approves.

G. Admixtures:

1. Air Entrainment: ASTM C-260.

2. Water Reducing and Set Retarding Agents: ASTM C-494.

   a. Type A: Set water reducing.

   b. Type B: Set retarding.

c. Type C: Set accelerating.

d. Type D: Water reducing and set retarding.

e. Type E: Water reducing and set accelerating.

f. Type F: High range water reducing (super plasticizer).*

g. Type G: High range water reducing and set retarding.*

*The relative durability factor of water reducing admixtures shall not be less than 80 and the chlorides content (as CI-) shall not exceed 1 percent by weight of the admixtures.

3. Calcium Chloride: None allowed.
4. Pozzolan: Pozzolan conforming to the requirements of ASTM C-618, Class F, is allowed as a Portland cement replacing agent under the following conditions:

   a. The maximum percentage of Portland cement replacement is:

      1. 15 percent, for concrete exposed to weather.

      2. 20 percent, for interior concrete.

   b. The ratio of replacement by weight of Pozzolan to cement shall be 1.25 to 1.0.

   c. The minimum cement content shall be used in the design formulas before replacement is made.

   d. Loss of ignition of pozzolan is less than 3 percent and the water requirement does not exceed 100 percent.

   e. All other requirements of this section still apply.

   f. Mix designs including trial batches are required for each aggregate source and for each concrete class.

H. ACI Mix Design:

1. The amount by which the average strength of a concrete mix exceeds the specified compressive strength shall be based upon no more than 1 in 100 random individual strength tests falling more than 500 psi below the specific strength.

2. Proportion the materials in accordance with ACI 211.1, 211.2 or 211.3 as

applicable to produce concrete having the properties or limitations of Table No. 3.

I. Hand Mixing:

1. Do not hand mix batches exceeding 0.5 cubic yards.

2. Hand mix only on watertight platform. Mix cement and aggregate prior to adding water.

3. Ensure all stones are thoroughly covered with mortar and mixture is of uniform color and consistency.

J. Heating, Water and Aggregate:

1. Do not allow products of fuel combustion to contact the aggregate.

2. Heat mixing water to 150 degrees F maximum. Heat aggregates prior to adding water.

3. Do not mix cement with water and aggregate at a mix temperature greater than 100 degrees F.

TABLE 3

CONCRETE MIX PROPERTIES

Concrete Properties	CONCRETE CLASSIFICATIONS Class 7000	Class 6000	Class 5000	Class 4000	Class 3000	Class 2000
Specified Compressive Strength at 28 days, min., psi	7000	6000	5000	4000	3000 (f)	2000 (f)
Compressive Strength at 7 days, psi, min. (a)	4690	4020	3350	2680	2010	1340
Cement content (94 lb. sacks of cement per cubic yard of concrete), min. (b)	(c)	(c)	(c)	6.0	5.5	4.5
Entrained air -content, (% by volume)	(d)	(d)	(d)	6/+-1	6+/-1	4.5+/1.5
Slump Range, in. (e)	2-4	2-4	2-4	2-4	2-4	2-5

(a) Used for monitoring purposes only.

(b) Includes pozzolan replacements.

(c) Cement content shall be appropriate to produce a mixture meeting the requirements for water/cement ratio and workability for the specific job conditions.

(d) Air content shall be appropriate to the exposure conditions.

(e) Not more than 8 inches after adding high range water reducing admixture (super-plasticizer) at site.

(f) Not allowed if concrete is exposed to freezing and thawing temperatures. Use Class 4000 or higher compressive strength and 6+/-1.0 percent air entrainment.

K. Reinforcing Steel: All bar material used for reinforcement of concrete shall be 60 ksi yield grade steel conforming to the requirements of ASTM Designation A-615.

L. Welded Wire Fabric: Welded wire fabric for concrete reinforcement shall conform to the requirements of ASTM A-185.

M. Expansion (Through) Joints: Preformed joint filler for use in expansion (through) joints shall conform to the Standard Specifications for Preformed Expansion Joint Filler for Concrete, ASTM D-1751.

4.16.3 Concrete Mix: For the purpose of practical identification, concrete has been divided into three classes: Class A, B, and C. Basic requirements and use for each class are as defined below:

Class	Minimum 28-day Comp. Strength (psi)	Primary Use
A	4000	Reinforced structural concrete, sidewalks, curb and gutter, cross gutters and pavements
B	3500	Unreinforced footings and foundations
C	2500	Thrust blocks, anchors and mass concrete

All concrete shall also comply with the following requirements:

A. Aggregates: The maximum size of the aggregate shall be not larger than one-fifth of the narrowest dimension between forms within which the concrete is to be cast, nor larger than three-fourths of the minimum clear spacing between reinforcing bars or between reinforcing bars and forms. For non-reinforced concrete slabs, the maximum size of aggregates shall not be larger than one-fourth the slab thickness.

B. Water: Sufficient water shall be added to the mix to produce concrete with the minimum practicable slump. The slump of mechanically vibrated concrete shall not exceed four inches. No concrete shall be placed with a slump in excess of five inches.

The maximum permissible water-cement ratio (including free moisture on aggregates) shall be 5 and 5-3/4 gallons per bag of cement respectively for Class A and B air entrained concrete.

C. Air-Entraining: Air content for air-entrained concrete shall comply with the following:

Coarse Aggregate Size (in.)	Air Content %
1-1/2 to 2-1/2	5 ± 1
3/4 or 1	6 ± 1
3/8 or ½	7 ± 1

The air entraining agent shall be added as liquid to the mixing water by means of mechanical equipment capable of accurate measurement and control.

4.16.4 Design of the Concrete Mix: At least 21 days prior to any placement of concrete the contractor shall inform the Engineer in writing of the source and grading of aggregates and the brand and type of cement and the brand and type of admixture, if any, he proposes to use for each class of concrete, and shall furnish certificates or other evidence satisfactory to the Engineer that the proposed materials meet the requirements of these Specifications.

When acceptable sources, types and gradation of aggregates are designated in the Contract Documents, certifications for such aggregates will not be required.

After the job mix has been designated, neither the source, character or grading of the aggregates nor the type or brand of cement or admixture shall be changes without prior notice to the Engineer.

If such changes are necessary, no concrete containing such new or altered materials shall be placed until the Engineer has designated a revised job mix.

When specified, a water-reducing, set-retarding admixture shall be used. When conditions are such that the temperature of the concrete at the time of placement is consistently above 75° F, a water-reducing, set-retarding admixture may be used, at the option of the Contractor. The cement content shall be the same as that required in the mix without the admixture.

4.16.5 Inspecting and Testing: The CONTRACTOR will be responsible for collecting samples and having all tests indicated below performed. The following tests will be performed by the methods indicated:

Test	Method (ASTM Designation)
Sampling	C 172*
Slump Test	C 143*
Air Content	C 231* or C 173*
Compression Test Specimens	C 31* or C 42*
Compressive Strength	C 39 or C 42
Unit Weight, Yield	C 138

*Tests of a portion of a batch may be made on samples representative of that portion for any of the following purposes:

(1) Determining uniformity of the batch.

(2) Checking compliance with requirements for slump and air content when the batch is discharged over an extended period of time.

(3) Checking compliance of the concrete with the specifications when the whole amount being placed in a small structure, or a distinct portion of a larger structure, is less than a full batch.

(4) Slump tests shall be run on each truck load or fraction thereof.

(5) Compression test specimens shall be collected for running a test for compressive strength in 7 days and in 28 days for every 50 cubic yards or fraction thereof for each section poured.

The engineer shall have free entry to the plant and equipment furnishing concrete under the Contract. Proper facilities shall be provided for the Engineer to inspect materials, equipment and processes and to obtain samples of the concrete. All tests and inspections will be conducted so as not to interfere unnecessarily with the manufacture and delivery of the concrete.

4.16.6 Handling and Measurement of Materials: Aggregates shall be stored or stockpiled in such a manner that separation of coarse and fine particles of each size will be avoided and that various sizes will not become intermixed before proportioning. Methods of handling and transporting aggregates shall be such as to avoid contamination, excessive breakage, segregation or degradation, or intermingling of various sizes. Scales for weighing aggregates and cement shall be beam type or springless dial type. They shall be accurate within 1 percent under operating conditions. All exposed fulcrums, clevises and similar working parts of scales shall be kept clean.

The quantities of cement and aggregates in each batch of concrete, as indicated by the

scales, shall be within the following percentages of the required batch weights:

Cement	- plus or minus 1.0 percent
Aggregates	- plus or minus 2.0 percent

Measuring tanks for mixing water shall be of adequate capacity to furnish the maximum amount of mixing water required per batch and shall be equipped with outside taps and valves to provide for checking their calibration unless other means are provided for readily and accurately determining the amount of water in the tank.

Except as otherwise provided in Section 4.16.7, cement and aggregates shall be measured as follows:

Cement shall be measured by weight or in bags of 94 lbs. each. When cement is measured by weight, it shall be weighed on a scale separate from that used for other materials, and in a hopper entirely free and independent of the hopper used for weighing the aggregates. When cement is measured in bags, no fraction of a bag shall be used unless weighed.

Aggregates shall be measured by weight. Mix proportions shall be based on saturated, surface-dry weights. The batch weight of each aggregate shall be the required saturated, surface-dry weight plus the weight of surface moisture it contains.

Mixing water shall consist of water added to the batch, water occurring as surface moisture on the aggregates and water introduced in the form of admixtures. The added water shall be measured by weight or volume to an accuracy of 1 percent of the required total mixing water. Wash water shall not be used as a portion of the mixing water for succeeding batches.

Dry admixtures shall be measured by weight, and paste or liquid admixtures by weight or volume, within a limit of accuracy of 3 percent.

4.16.7 Mixers and Agitators: Concrete may be furnished by batch mixing at the site of the work or by ready-mix methods. Agitators may be truck mixers or track agitators.

Mixers shall be capable of thoroughly mixing the concrete ingredients into a uniform mass within the specified mixing time and of discharging the mix without segregation. Each mixer or agitator shall bear a manufacturer's rating plate indicating the rated capacity and recommended speeds of rotation, and shall be operated in accordance with these recommendations.
Concrete shall be uniform and thoroughly mixed when delivered to the work. Variations in slump of more than 1 inch within a batch will be considered evidence of inadequate mixing and shall be corrected by changing batching procedures, increasing mixing time, changing mixers or other means. Mixing time shall be within the limits specified below unless the Contractor demonstrates by mixer performance tests that adequate uniformity

is obtained by different times of mixing. For this purpose the testing program and uniformity requirements shall be as set forth in ASTM C-94, under supervision of the Engineer.

A. Stationary Mixers: For concrete mixed at the site of the work with paving mixers or stationary mixers, the time of mixing after all cement and aggregates are in the mixer drum shall be not less than 1 minute for mixer capacities of one cubic yard or less, plus 15 seconds for each cubic yard or fraction thereof of additional capacity.

   The batch shall be so charged into the mixer that some water will enter in advance of the cement and aggregates and all mixing water shall be introduced into the drum before one-fourth of the mixing time has elapsed.

   When used for complete mixing of concrete, stationary mixers shall have controls provided to insure that the batch cannot be discharged until the required mixing time has elapsed.

   If truck mixers are used, the requirements below for truck mixers and truck-mixed concrete shall apply.

B. Volumetric Batching and Continuous Mixing at the Site: Unless otherwise specified, volumetric batching and continuous mixing at the construction site will be permitted if approved by the Engineer. The batching and mixing equipment shall conform to the requirements of ASTM C-685 (AASHTO 241) and shall be demonstrated prior to placement of concrete, by tests with the job mix, as producing concrete meeting the specified proportioning and uniformity requirements.

C. Ready-mixed Concrete: Ready-mixed concrete shall be mixed and delivered to the site of the work by one of the following methods (as per ACI 304 - Chapters 4 and 5):

   1. Truck-mixed concrete: Mixed completely in a truck mixer.

   2. Shrink-mixed concrete: Mixed completely in a stationary mixer, and the mixing completed in a truck mixer.

   3. Central-mixed concrete: Mixed completely in a stationary mixer and the mixed concrete transported to the point of delivery in a truck agitator or in a truck mixer operating at agitated speed or in non-agitating equipment.

      <u>Concrete shall be delivered and deposited in its final position within 90 minutes after adding the cement and water to the mixture</u>.

      Truck mixers and agitators shall be equipped with revolution counters by which the number of revolutions of the drum or blades may be readily verified.

When ready-mixed concrete is furnished, the supplier shall furnish the Engineer a state-of-delivery ticket showing the time of loading, and the quantities of materials used for each load of concrete, amount and types of admixtures, bags of cement in lieu of batch weights, and all quantity of water added on site.

D. Truck-mixed Concrete: Concrete that is completely mixed in a truck mixer shall be agitated at the mixing speed designed by the manufacturer from 70 to 100 revolutions to produce a uniformity of concrete as indicated in Appendix XI of ASTM C-94. Mixing in excess of 100 revolutions shall be allowed only to reblend stagnant spots, 10 to 15 revolutions at mixing speed has shown to be adequate. Revolutions in excess of 115 must be at agitation speeds only.

The volume of mixed concrete shall not exceed 63% of the total volume of the drum or container. Exceeding this capacity is cause for rejection of the load unless performance tests for the mixer are provided.

A minimum of 30 revolutions shall be used at mixing speeds to blend the additional water added, at the job site, to bring the slump, of the concrete, to that specified. However, the water/cement ratio of the mix design should never be exceeded.

Mixing in excess of 100 revolutions shall be at the speed designated by the manufacturer of the equipment as agitating speed. The mixing operation shall begin within 30 minutes after the cement has been added to the aggregates and the water shall be added during mixing. When mixing is begun during or immediately after charging, a portion of the mixing water shall be added ahead of, or with, the other ingredients.

If trucks are found to be loaded beyond mixer capacity this shall be deemed as cause for rejection of the entire load.

E. Dry-Batched Concrete-Float Delivery: When the cement is batched as the last ingredient with the drum stopped and not rotated until mixing is performed at the job site, delays of three hours will be acceptable if the mixed concrete shows no signs of hydration and the mix is uniform and consistent.

Load size should be reduced by 10 to 20 percent to avoid spilling of the dry cement.

It should be noted that extreme care is required to load the cement for this type of an operation and this method is to be used only as a last resort.

Mixing is in accordance with truck mixed concrete and all phases of this procedure are to follow ACI 304, 5.23, ACI 305, 3.3.1.1, 3.3.1.2, 3.3.2.

F. Shrink-mixed Concrete: When concrete is partially mixed at a central plant and the mixing is completed in a truck mixer, the mixing time in the central plant mixer shall

be the minimum required to intermingle the ingredients and shall be not less than 30 seconds. The mixing shall be completed in a truck mixer and the number of revolutions of the drum or blades at mixing speed shall be not less than 70 nor more than 100. Mixing in excess of 100 revolutions shall be at the speed designated by the manufacturer of the equipment as agitating speed.

Absolute volume of all ingredients batched shall not exceed 13% of the drum volume.

G. Central-mixed Concrete: For central-mixed concrete, mixing in the stationary mixer shall meet the same requirements as batch mixing at the site.
When an agitator, or truck mixer used as an agitator, transports concrete that has been completely mixed in a stationary mixer, mixing during transportation shall be at the speed designated by the manufacturer of the equipment as agitating speed.

The use of non-agitating equipment to transport concrete to the work site will be permitted only if the uniformity and consistency of the concrete is shown to be such as will maintain the integrity for which it was designed.

Equipment should meet the requirements outline in ACI 304 5.3.

4.16.8 Forms: Forms shall be of wood, plywood, steel or other approved material and shall be mortar tight. The forms and associated falsework shall be substantial and unyielding and shall be constructed so that the finished concrete will conform to the specified dimensions and contours. Form surfaces shall be smooth and free from holes, dents, sags or other irregularities. Forms shall be coated with a non-staining form oil before being set into place.

Metal ties or anchorages within the forms shall be equipped with cones, she-bolts or other devices that permit their removal to a depth of at least one inch without injury to the concrete. Ties designed to break off below the surface of the concrete shall not be used without cones.

All edges that will be exposed to view when the structure is completed shall be chamfered, unless finished with molding tools.

4.16.9 Preparation of Forms and Subgrade: Prior to placement of concrete the forms and subgrade shall be free of chips, sawdust, debris, water, ice, snow, extraneous oil, mortar or other harmful substances or coating. Any oil on the reinforcing steel or other surfaces required to be bonded to the concrete shall be removed. Rock surfaces shall be cleaned by air-water cutting, wet sandblasting or wire brush scrubbing, as necessary, and shall be wetted immediately prior to placement of concrete. Subgrade soils must be moist and uniformly compacted to the minimum required in the specifications. Placement of concrete on mud, dried earth, uncompacted fill or frozen subgrade will not be permitted.

Unless otherwise specified in the Contract Documents, when concrete is to be placed over

drain fill, the contact surface of the drain fill shall be covered with a layer of asphalt-impregnated building paper or polyvinyl sheeting prior to placement of the concrete.

Items to be embedded in the concrete shall be positioned accurately and anchored firmly.

Weep holes in walls shall be formed with nonferrous materials.

4.16.1 Conveying: Conveying should be accomplished as rapidly as practicable without segregation or loss of material. Metal or metal lined chutes should be used with adequate baffling and hoppers.

Belt conveyors shall conform to ACI 304 Chapter 3 of Placing Concrete with Belt Conveyors.

Conveying by pumping methods shall conform to ACI 304 Chapter 3 of Placing Concrete by Pumping Methods.

4.16.1 Placing: All phases of placing concrete shall conform to the recommended practices as outlined in ACI 304 Chapter 6 of Measuring, Mixing, Transporting, and Placing.

No concrete shall be placed until forms, subgrade, reinforcing steel and all other preparations have been checked for compliance with the related specifications. All concrete is to be placed in the presence of the City Engineer or his duly authorized representative.

The concrete shall be deposited in such a manner as will prevent the segregation and aggregates and the rate regulated to maintain a plastic state of the mix.

Tremens shall be used and at no time shall the free fall of the concrete exceed 4 feet in height.

For monolithic construction successive layers should be placed while the underlying layer is still responsive to vibration.

Internal stays and braces used for form alignment and shape retention shall be removed when the concrete has been placed to render their service unnecessarily.

If placement is interrupted to allow the formation of "cold joints," the Contractor shall stop the placement of concrete and form a construction joint as per Section 4.16.14 or he may continue at the direction of the Project Engineer.

The depth of the horizontal layer shall not exceed the form design limits or usually be limited to 4 feet in walls up to 12 inches thick.

If placing is discontinued prior to the completion of a layer, vertical bulkheads shall be

formed as per the Engineer's direction.

4.16.12 Consolidation: Unless otherwise specified in the Contract Documents, concrete shall be consolidated with an approved type mechanical vibrator. Internal type, form and surface (screed) vibrators are all acceptable so long as the size and shape of the vibrator is matched to the mass and design of the concrete.

The location, manner, and duration of the vibratory device shall be such as to thoroughly consolidate the concrete without causing settlement of the coarse aggregate, sand streaking or less of air entrainment and form deflection.

Vibrators should be inserted vertically at uniform spacing over the entire area of placement. Distance between insertions should generally be about 1-1/2 times the radius of action or such that the area clearly overlays the adjacent just-vibrated area by a few inches.

Previous layers should be penetrated by a minimum of six inches and held momentarily to insure knitting.

Under no circumstances should the vibrator be used to transport concrete along the conveying system or the forms.

4.16.13 Construction Joints: Construction joints shall be made at the locations shown on the Approved Plans. If construction joints are needed which are not shown on the Approved Plans, they shall be placed in locations approved by the Engineer.

Where a feather edge would be produced at a construction joint, as in the top surface of a sloping wall, an insert form shall be used so that the resulting edge thickness on either side of the joint is not less than 6 inches.

In walls and columns as each lift is completed, the top surfaces shall be immediately and carefully protected from any condition that might adversely affect the hardening of the concrete.

Steel tying and form construction adjacent to concrete in place shall not be started until the concrete has cured at least 12 hours. Before new concrete is deposited on or against concrete that has hardened, the forms shall be retightened. New concrete shall not be placed until the hardened concrete has cured at least 12 hours, or until the concrete is no longer plastic.

Surfaces of construction joints shall be cleaned of all unsatisfactory concrete, latency, coatings, stains or debris by either wet sandblasting after the concrete has gained sufficient strength to resist excessive cutting, or air-water cutting as soon as the concrete had hardened sufficiently to prevent the jet from displacing the coarse aggregates, or both. The surface of the concrete in place shall be cut to expose clean, sound aggregate, but not

so deep as to undercut the edges of larger particles of the aggregate. After cutting, the surface shall be thoroughly washed to remove all loose material. If the surface is congested by reinforcing steel, is relatively inaccessible, or it is considered undesirable to disturb the concrete before it is hardened, cleaning of the joint by air-water jets will not be permitted and the wet sandblasting method will be required after the concrete has hardened.

The surfaces shall be kept moist for at least one hour prior to the placement of new concrete. The new concrete shall be placed directly on the cleaned and washed surface.

4.16.14 Expansion and Contraction Joints: Expansion and contraction joints shall be made as shown on the Approved Plans.

Exposed concrete edges at expansion and contraction joints shall be carefully tooled or chamfered, and the joints shall be free of mortar and concrete. Joint filler shall be left exposed for its full length with clean and true edges.

When open joints or weakened plane "dummy" joints are specified, the joints shall be constructed by the insertion and subsequent removal of a wood strip, metal plate or other suitable template in such a manner that the corners of the concrete will not be chipped or broken. The edges of the concrete at the joints shall be finished with an edging tool prior to removal of the joint strips.

Preformed expansion joint filler shall be held firmly in the correct position as the concrete is placed.

4.16.15 Waterstops: Waterstops shall be held firmly in the correct position as the concrete is placed. Joints in metal waterstops shall be brazed or welded. Joints in rubber or plastic waterstops shall be cemented, welded or vulcanized as recommended by the manufacturer.

4.16.16 Removal of Forms: Forms shall be removed only when the Engineer is present and shall not be removed without his approval. Forms shall be removed in such a way as to prevent damage to the concrete. Supports shall be removed in a manner that will permit the concrete to take the stresses due to its own weight uniformly and gradually.

Forms, supports, and housings shall not be removed until the concrete has attained the strength specified for this purpose. The strength will be determined by compression testing of test cylinders cast by the Engineer for this purpose and cured at the work site in the manner specified in ASTM C-31 for determining form removal time.

4.16.17 Finishing Formed Surfaces: All concrete surfaces shall be true and even, and shall be free from open or rough spaces, depressions or projections.

Immediately after the removal of forms:

All bulges, fins, form marks or other irregularities which in the judgement of the Engineer will adversely affect the appearance or function of the structure shall be removed. All form bolts and ties shall be removed to a depth of at least 1 inch below the surface of the concrete. The cavities produced by form ties and all other holes of similar size and depth shall be thoroughly cleaned. The interior surfaces of the cavities shall be coated with a bonding agent or kept continuously wet for at least 3 hours, then carefully packed with a non-shrink grout mixed not richer than 1 percent cement to 3 parts sand.

Holes left by form bolts or straps which pass through the wall shall be filled solid with mortar.

Patching mortar shall be thoroughly compacted into place to form a dense, well-bonded unit, and the in-place mortar shall be sound and free from shrinkage cracks.

All patched areas shall be cured as specified in Section 4.16.19.

4.16.18 Finishing Unformed Surfaces: All exposed surfaces of the concrete shall be accurately screeded to grade and then float finished, unless specified otherwise by the Contract Documents or at the direction of the Engineer.

Excessive floating or troweling while the concrete is soft will not be permitted.

The addition of dry cement or water to the surface of the screeded concrete to expedite finishing will not be allowed.

Joints and edges on unformed surfaces that will be exposed to review shall be chamfered or finished with molding tools.

4.16.19 Curing and Coatings: Concrete shall be prevented from drying for a curing period of at least 7 days after it is placed. Exposed surfaces shall be kept continuously moist for the entire period or until curing compound is applied as specified below. Moisture shall be maintained by sprinkling, flooding or fog spraying, or by covering with continuously moistened canvas, cloth mats, straw, sand or other approved material. Wood forms (except plywood) left in place during the curing period shall be kept wet. The floor slab shall be cured by flooding. Formed surfaces shall be thoroughly wetted immediately after forms are removed and shall be kept wet until patching and repairs are completed. Water or covering shall be applied in such a way that the concrete surface is not eroded or otherwise damaged.

Water for curing shall be clean and free from any substances that will cause discoloration of the concrete.
Except as otherwise specified in the Contract Documents, and except for construction joint surfaces, concrete may be coated with curing compound in lieu of the continued application of moisture.

A non-yellowing acrylic curing and sealing compound conforming to ASTM C1315, Type 1, Class A shall be thoroughly mixed immediately before applying, and shall be applied at a uniform rate of 200 to 600 square feet per gallon depending on surface finish. It shall form a uniform, continuous, adherent film that shall not check, crack or peel, and shall be free from pin holes or other imperfections.

Curing compound shall not be applied to surfaces requiring bonding with subsequently placed concrete, as at construction joints, shear plates, reinforcing steel, and other embedded items.

Exterior surfaces which are to be backfilled against shall be coated with a waterproofing membrane. The membrane shall be Hunt's No. 120 black or an acceptable alternate. Surfaces shall be thoroughly cleaned and free of foreign material before application. The application rate shall be one gallon per 225 square feet.

Surfaces subjected to heavy rainfall or running water within 3 hours after the compound has been applied, or surfaces damaged by subsequent construction operations during the curing period shall be re-sprayed in the same manner as for the original application.

4.16.20 Removal or Repair: When concrete is honeycombed damaged or otherwise defective, the Contractor shall remove and replace the structure or structural member containing the defective concrete, or correct or repair the defective parts. The Engineer will determine the required extent of removal, replacement or repair.

Prior to starting repair work the Contractor shall obtain the Engineer's approval of his plan for making the repair. Such approval shall not be considered a waiver of the City's right to require a complete removal of defective work if the completed repair does not produce concrete of the required quality and appearance.

Repair work shall be performed only when the Engineer is present.

Repair of formed surfaces shall be started within 24 hours after removal of the forms.

Except as otherwise approved by the Engineer, the appropriate methods described in the ACI Manual of Concrete Practice shall be used. If approved in writing by the City, proprietary compounds for adhesion or as patching ingredients may be used. Such compounds shall be used in accordance with the manufacturer's recommendations.

Curing as specified in Section 4.16.19 shall be applied to repaired areas immediately after the repairs are completed.

4.16.21 Concreting in Cold Weather: When the atmospheric temperature may be expected to drop below 40° F at the time concrete is delivered to the work site, during placement, or at any time during the curing period, the following provisions also shall apply:

A. The temperature of the concrete at time of placing shall not be less than 50° F nor more than 70° F. The temperature of neither aggregates and mixing water prior to mixing with the cement shall be in accordance with "Recommended Practice for Cold Weather Concreting," ACI Standard 306.

B. When the daily minimum temperature is less than 40° F, concrete structures shall be insulated or housed and heated after placement. The temperature of the concrete and air adjacent to the concrete shall be maintained at not less than 50° F nor more than 90° F for the duration of the curing period.

C. Methods of insulating, housing and heating the structure shall conform to "Recommended Practice for Cold Weather Concreting," ACI Standard 306.

D. When dry heat is used to protect concrete, means of maintaining an ambient humidity of at least 40 percent shall be provided unless the concrete has been coated with curing compound as specified in Section 4.16.19 or is covered tightly with an approved impervious material.

4.16.22 Concreting in Hot Weather: When climatic or other conditions are such that the temperature of the concrete may reasonably be expected to exceed 90° F at the time of placement, or during the first 24 hours after placement, the following provisions also shall apply:

A. The Contractor shall maintain the temperature of the concrete below 90° F during mixing, conveying, and placing. Methods used shall conform to "Recommended Practice for Hot Weather Concreting," ACI Standard 305.

B. The concrete shall be placed in the work immediately after mixing. Truck mixing shall be delayed until only time enough remains to accomplish it before the concrete is placed.

C. Exposed concrete surfaces which tend to dry or set too rapidly shall be continuously moistened by means of fog sprays or otherwise protected from drying during the time between placement and finishing, and after finishing.

D. Finishing of slabs and other exposed surfaces shall be started as soon as the condition of the concrete allows and shall be completed without delay.

E. Concrete surfaces exposed to the air shall be covered as soon as the concrete has hardened sufficiently and shall be kept continuously wet for at least the first 24 hours of the curing period, and for the entire curing period unless curing compound is applied as specified in subsection g, below.

F. Formed surfaces shall be kept completely and continuously wet for the duration of

curing period (prior to, during and after form removal) or until curing compound is applied as specified in subsection g, below.

G. If moist curing is discontinued before the end of the curing period, a curing compound shall be applied immediately, following the procedures specified in Section 4.16.19.

4.17 CONCRETE PAVEMENT

4.17.1 Description: The work covered in this section of Specifications pertains to the construction of Portland cement concrete pavements in streets, alleys and public rights-of-way.

4.17.2 Materials: Cement and other concrete materials, joint filler, curing materials and reinforcing steel, required by the Approved Plans and Specifications, shall conform to the requirements of Section 4.16. The job concrete mix shall be that shown in the Special Conditions. Ordinarily, the slump of the concrete when placed by machine methods shall be between one half (1/2) inch and three (3) inches.

4.17.3 Construction:

A. Subgrade: The preliminary subgrade before the setting of forms shall be graded and compacted as required under Section 4.5.

If subgrade paper or polyethylene sheeting is required it shall be placed in such a manner to protect it from tearing or puncturing. Minimum side lap is four (4) inches while minimum end lap is twelve (12) inches.

After the forms have been securely set to grade and alignment, the subgrade between the forms shall be brought to true cross-section. Where thickened edges for pavements are required, the subgrade shall be excavated and shaped to provide for the standard section.

Wherever possible, vehicles shall be kept off the finished subgrade. If vehicles must travel on the subgrade ahead of the paving, a power drag shall be carried immediately ahead of placing concrete. Irregularities in the subgrade caused by trucks during the placement of concrete shall be smoothed out and compacted immediately ahead of placing the concrete.

The Subgrade, as finally completed, shall be maintained by the Contractor at required density and optimum moisture content by wetting with water until the concrete is actually placed.

B. Forms: Forms may be of wood or metal or any other material at the option of the Contractor, provided the forms as constructed result in a pavement of specified thickness, cross-section, grade and alignment as shown on the Approved Plans. Slip

form construction may be used subject to the approval of the City Engineer. Forms shall be adequately supported to prevent deflection or movement. Forms shall be used which will result in concrete pavement conforming with the Approved Plans and Specifications. When checked for straightness, forms should not vary by more than 1/8" in 10 feet from the true plane surface on top and 1/4" in 10 feet on the face of the form. Flexible or curved forms are highly recommended for use when the curve has a radius of 100 feet or less. The forms may be removed the day after pouring if the concrete is sufficiently set to withstand removal without danger of chipping or spalling. When forms are removed before the expiration of the curing period, the edges of the concrete shall be protected with moist earth or sprayed with curing compound immediately. All forms shall be cleaned, oiled, and examined for defects before they are used again.

C. Compaction of Subgrade: Covered in Section 4.5.

D. Placing Concrete: The concrete shall be placed upon the prepared subgrade between the forms to the required depth and cross-section in a continuous operation between construction or expansion joints.

The concrete shall be thoroughly consolidated against and along all forms or adjoining pavements by such means as will prevent gravel pockets along the edges of the finished pavement. Any gravel pockets found after removing the forms shall be repaired.

When integral curb is being constructed with the pavement, fresh concrete for the integral curb shall be placed at such time as will enable the top section of the curb to be consolidated, finished, and bonded to the pavement slab while the concrete is plastic.

Where curb is not being placed integral with the pavement slab, reinforcing steel dowels or keyways shall be placed in the base section for the curb.

Prior to placing concrete around manholes, catch basins, gate chambers, etc., a temporary cover fitting below the rim of the ring casting shall be provided to prevent the concrete from flowing into them.

1. Placing Concrete at Expansion Joints: Concrete placement around expansion joints shall be such that the expansion joint assembly will not be disturbed and that it will remain in a straight line perpendicular to the subgrade, as shown on the Approved Plans. The concrete shall then be spaded thoroughly or vibrated along the entire length of the joint to consolidate the concrete and leave no rock pockets anywhere at the joint. If any rock pockets are exposed, they shall be repaired.

2. Placing Concrete With Reinforcing Steel Bars or Wire Mesh: When reinforcing is to be used, concrete shall be placed in one lift with an adequate method used to

position and secure the reinforcing bars or wire mesh at the designated locations in the slab.

Reinforcement shall be free of dirt, mill scale, oil, grease, or other foreign material that may impair bond. Steel, coated with some rust, may be used if the oxidations are not deep or loose coated in the opinion of the City Engineer.

Successive mats of steel or wire mesh shall be securely lapped together and tied. Longitudinal bars will lap a minimum of 30 bar diameters. Wire mesh will lap 6 to 12 inches, and provided one complete series of square mesh is incorporated in the overlap.

Reinforcing steel or wire mesh shall be laid as a continuous mat. Continuity shall be maintained between expansion joints. Steel shall terminate within two to six inches of the joint.

3. Slip-Form Construction: At the option of the contractor and with the approval of the Engineer, concrete pavement may be constructed by the use of slip-form paving equipment.

   Slip-form paving equipment shall be provided with traveling side forms of sufficient dimensions, shape, and strength to support the concrete laterally for a sufficient period of time during placement to produce pavement of the required cross-section; the equipment shall spread, consolidate, screed, and float-finish the freshly placed concrete in such a manner as to provide a dense and homogenous pavement.

   When concrete is being placed adjacent to an existing pavement, that part of the equipment which is supported on the existing pavement shall be equipped with protective pads to avoid breaking or cracking the pavement edge.

   After the concrete has been given a preliminary finish by the finishing devices in the slip-form paving equipment, the surface of the fresh concrete shall be checked with a straight edge to comply with the tolerances and finished as specified in the following Section H-5.

   Final finishing of slip-form pavement shall be as specified in the following Section H-4.

E. Compacting Concrete: Concrete may be compacted by (1) hand methods, (2) machine methods and (3) combined machine and vibrators method at the option of the contractor. The hand method will be limited to irregular areas, irregular sections, alleys and pavements placed in confined work areas.

   1. Hand Compacting: Concrete shall be spread evenly with shovels and spaded along

the forms with a perforated spade after which it shall be struck off with a rigid metal shod tamping rod. The strike-off rod shall be operated with a combined tamping, crosswise and sawing action to produce a smooth surface free from depressions or inequalities. A small amount of mortar must be kept ahead of and extending substantially along the entire length of the rod. Excessive swinging of the rod will not be permitted.

2. Machine Compacting: The machine used for compacting shall be self-propelled and designed to run on the side forms. Movable parts shall be capable of adjustment and they shall be adjusted so as to produce accurately the roadway sections shown on the Approved Plans. The machine shall be equipped with two reciprocating screeds. The tops of the forms shall be kept clean with a suitable device attached to the machine.

   The travel of the machine on the forms shall be maintained true without lift, wobble or other variations which might prevent a precise strike off.

   The machine shall be put in forward motion as soon as concrete is deposited on the subgrade. On the first pass, a roll of concrete shall be carried ahead of the screed. Screeds and tampers shall be operated so as not to disturb expansion joints and caps.

   Machines shall be operated prior to placing longitudinal and transverse dummy joints.

   Machines shall be operated as many times as may be necessary to compact concrete free from rock pockets and to a section that can be finished properly.

   Care must be exercised not to overwork the concrete and bring an excess of mortar to the surface.

3. Combined Vibration and Machine Compacting: The combined vibration and compaction equipment shall be demonstrated to the satisfaction of the Engineer as being capable of consolidating the concrete across the full width of the pavement into a homogeneous mass, free of rock pockets, and without separation of mortar and aggregates.

   The equipment shall consist of the machine described in Section 4.17.3E2, or an approved spreading machine to which is attached a vibrating unit composed of individual internal vibrators. The vibrators shall be spaced equidistantly, and the distance from the side forms to the nearest vibrator shall not exceed 14 inches.

   The vibrating unit shall not rest upon the side forms nor impart vibration to the strike-off screeds. The individual vibrators shall be attached to a frame in a manner which will permit adjustment of both the depth of penetration into the

concrete and the angle of the vibrator with the horizontal.

The vibrators shall be capable of vibrating at rates between 8,000 and 12,000 impulses per minute when inserted in the concrete.
On the first trip over the freshly placed concrete the vibration equipment shall be submerged in the concrete to ensure adequate consolidation. Unless otherwise directed by the Project Engineer, the vibration equipment shall be operated on the first pass only.

After the first pass with vibration, one or more trips without vibration shall be made as described in Section 4.17.3E2.

As often as the Engineer may require, the Contractor shall make trial runs with concrete containing the full amount of cement as specified in Section 4.16.3, Concrete Mixes, or as specified in the Special Conditions, compacting with and without vibration to determine the relative water contents required.

4. Vibrating Screed Concrete Pavement Construction: The type of vibrating screed with the contractor proposes to use, whether roller or beam, shall be subject to approval by the Engineer. Upon request by the Engineer a test section of pavement shall be placed for the purpose of demonstrating the capabilities of the screed to satisfactorily compact and strike off the concrete to the established grade and section.

   Concrete shall be uniformly distributed between the forms and it shall then be compacted and screeded to the level of the top of the forms by means of the vibrating screed. Supplemental compaction by hand spading or mechanical vibration of the concrete adjacent to the forms will be required if the concrete cannot otherwise be adequately compacted.

   The vibrating screed shall be operated over the freshly placed concrete in successive passes only a sufficient number of times to obtain maximum compaction. Over-vibration of the concrete, resulting in an excess of mortar at the surface of the pavement, will not be permitted.

   After the final passage of the vibrating screed, the surface of the concrete shall be at the established pavement grade and cross-section and shall be sufficiently smooth as to require only a very moderate amount of hand finishing for smoothness to meet approval of the Project Engineer.

F. Water: Water for pavement construction will be furnished as provided in Section 4.16.

G. Joints: Transverse and longitudinal joints for street pavement may be contraction joints, construction or expansion joints as shown in the Standard Drawing numbers

531A and 531B and as called for in these Specifications. When the pavement abuts an existing pavement, the locations of the joints in the new pavement shall coincide with the joints in the existing pavement unless otherwise shown in the Contract Documents.

1. Formed Transverse Contraction Joints: Standard spacing of transversely formed contraction joints shall be at intervals of fifteen (15) feet or less across the full width of the pavement and at right angles to the center line of the roadway. On horizontal curves the spacing of fifteen (15) feet shall be along the outer edge of the pavement.

   For intersections and other irregular areas, the arrangement of contraction joints shall be placed in accordance with standard intersection patterns. The area of any one irregular pattern formed by contraction joints in intersections shall not exceed two hundred twenty-five (225) square feet and the greatest dimension thereof shall not exceed fifteen (15) feet.

   When paving a second lane adjacent to the previously paved lane, the contraction joints shall be matched with the former; except on curves where resultant panel would be less than twelve and one-half (12-1/2) feet, measured longitudinally.

   Where uncontrolled cracks are existing in the first lane, they shall be matched as nearly as possible in the second lane. Should the uncontrolled cracks in the existing paved lane be too frequent or in random locations and impossible to match with a uniform spacing in the second lane, then in that event the two lanes shall be completely separated by 3/16-inch joint material extending from the surface to one (1) inch below the bottom of the concrete being placed.

   Where integral curb or doweled curb is placed along with the concrete pavement, premolded joint filler material shall be placed in the full section of the curb in true alignment with the pavement joint and in perpendicular position.

2. Construction of Formed Contraction Joints: Formed construction joints shall be constructed by embedding preformed joint material. The filler shall be cut to the exact sections of the joint.

   Transverse contraction joints (dummy joints) shall be placed after compaction and finishing of concrete have been completed and before initial set. A groove shall be cut into the surface at the location of joint, using a tool provided with stops (tee iron) to prevent cutting the groove deeper than the planned depth of the joint filler. The joint filler shall then be forced into the groove until the top is flush with the pavement surface.

   After the joint filler has been imbedded in the concrete, the surface of the pavement shall be finished against the filler strip with hand floats to restore the

surface finish. While performing this operation, the filler strip must be maintained in a vertical or normal position, true to alignment. After finishing, the entire area of the joint shall be true to grade and smoothness without any irregularities.

3. Sawed Contraction Joints: Sawed contraction joints shall be constructed by sawing a vertical groove in the hardened concrete on an approved schedule after placing and before development of random cracks in the concrete slab. Transverse contraction joints shall be sawed before the longitudinal joints are sawed.

   Sawed longitudinal joints in general are not critical as to a specific time schedule after hardening of the concrete and may be delayed under favorable conditions before an incidence of longitudinal random cracking begins. Sawing of the joints shall begin as soon as the concrete has hardened sufficiently to permit sawing without excessive raveling, usually 4 to 24 hours. All joints shall be sawed before uncontrolled shrinkage cracking occurs. If necessary, the sawing operations shall be carried on both day and night until completed, regardless of weather conditions, as directed by the Engineer.

   Two or more sawing units may be required to accomplish the sawing in order to minimize random cracking. Standby equipment shall be on the job to ensure continuous sawing as specified regardless of any breakdown of equipment.

   Where curing membrane is used, the area disturbed by sawing of joints shall be resprayed immediately upon completion of the sawing and sealing operation and care shall be exercised to prevent the curing compound from getting into the groove. Joint sealing compound will not adhere to concrete if curing compound is present.

   The depth of sawed transverse and longitudinal contraction joints shall be not less than one-fourth (1/4) the depth of the slab.

   After the curing period the joints shall be cleaned and sealed with joint sealants. Excess scaling material shall be cleaned off the surface of the pavement before opening to traffic.

4. Transverse Construction Joints: Transverse construction joints of the type shown in the Standard Drawings shall be placed whenever the placing of concrete is suspended for more than 30 minutes. A butt joint with dowels or a thickened-edge joint shall be used if the joint occurs at the location of a contraction joint. Keyed joints with tie bars shall be used if the joint occurs at any other location.

5. Transverse Expansion Joints: Transverse expansion joints are placed only where shown on the Approved Plans or where directed by the Project Engineer.

   Transverse expansion joints shall be constructed with premolded material, one-

half inch (1/2") in thickness. They shall extend the full width of the pavement and from one inch (1") into the subgrade to the one inch (1") below the top of the pavement. The joint alignment must be at right angles to the pavement center line unless otherwise specified.

The expansion joint filler shall be held in a vertical position. An approved installing bar or other device shall be used if necessary to ensure proper grade and alignment during placing and finishing of the concrete. The device must be in place long enough to prevent sagging of the material, especially on streets having steep grades.

Finished joints shall not deviate in horizontal alignment more than 1/4 inch from a straight line. If joint fillers are assembled in sections, there shall be no offsets between adjacent units. No plugs of concrete shall be permitted anywhere within the expansion space.

In multiple lane construction, the joints shall be matched so as to form a continuous alignment over all lanes. Expansion joints shall extend continuously through all curbs, where curbs are integral, special care being exercised to preserve alignment perpendicular to the pavement in the curb section.

6. Sealing Expansion Joints: After the pavement is cured and before any traffic, the space above the top of expansion joint filler strip shall be thoroughly cleaned of all loose material. The one-half inch (1/2") wide groove shall be completely free of any projecting concrete from the sides and the groove shall be continuous across the slab to each edge. It shall then be filled level with the pavement surface with joint sealant.

   The joint sealant material shall be heated and placed in complete accord with the manufacturer's instructions. Burned material will be rejected. The expansion joint groove shall be dry at the time of pouring the sealing compound.

7. Longitudinal Contraction Joints: The joints shall be constructed in true alignment with respect to their proper location on center line or parallel thereto as is shown in a succeeding subsection.

8. Standard Location for Longitudinal Joints: Standard location or longitudinal joints, whether contraction or construction, shall conform to Portland Cement Association recommendations.

9. Longitudinal Expansion Joints: Longitudinal expansion joints shall be as shown on the Approved Plans or where required for concrete pavement between or along retaining walls, curbs or other structures. They shall be placed to conform to Portland Cement Association recommendations.

10. Longitudinal Construction Joints: Longitudinal construction joints shall be as shown on the Standard Drawings. The Contractor may use an approved keyed joint in lieu of thickened edge for longitudinal construction joint. The Contractor shall submit plans for the keyed joint for approval by the Engineer prior to construction.

H. Finishing Concrete: Hand finishing or machine finishing of the entire pavement surface will be permitted unless otherwise provided in the Special Conditions.

On all vertical curves and at irregular intersections, modified tools shall be provided as necessary to secure a smooth, uniform contour and surface.

All tools shall be kept in first-class working order and shall be inspected daily. Worn or defective tools will not be permitted. A sufficient number of tools shall be provided for the work to proceed efficiently.

1. Hand Finish: After the concrete has been struck off and consolidated, it shall be smoothed by longitudinal floating. Floating shall continue until all irregularities are removed.

   After the final passage of the longitudinal float, transverse floating shall be continued with long handled floats operated from outside the pavement slab.

   After floating, the surface shall be scraped with a grout rod at least town (10) feet in length with a long handle for operating at the edge of the pavement. The grout rod shall be operated to correct irregularities in the pavement surface and remove water and laitance.

2. Machine Finishing: The finishing machine shall be of a type approved by the Project Engineer. The machine shall be adjustable to both crown and plane of the finished pavement surface. The screed shall oscillate longitudinally during its travel transversely across the pavement.

   The finishing machine shall be moved over the pavement as many times as is necessary to give the pavement a smooth even-textured surface, conforming to the exact crown and cross-section specified on the Approved Plans.

3. Edging: Before final finishing is completed and before the concrete has taken the final set, the pavement shall be edged as indicated below.

LOCATION	RADIUS
Edge of Pavement	One-Eighth (1/8) Inch
Formed Longitudinal Contraction Joints	One-Eighth (1/8) Inch
Longitudinal Construction Joints	One-Eighth (1/8) Inch

Transverse Construction Joints	One-Eighth (1/8) Inch
Formed Transverse Contraction Joints	One-Eighth (1/8) Inch
Expansion Joints - Type A	One-Eighth (1/8) Inch
Curbs--Back Edge	One-Half (1/2) Inch
Curbs--Front Edge	One (1) Inch

Particular attention shall be given to edge at the appropriate time. The concrete shall have attained a partial set and all free water shall have disappeared so that the edged joints will be clearly defined, with no tearing or slump of the edges.

4. Final Finish: A burlap drag or broom shall be used for final finishing. The burlap drag shall be at least 3 ft. wide and long enough to cover the entire pavement width. It shall be kept clean and saturated with water while in use. It shall be laid on the pavement surface and dragged in the direction in which the pavement is being placed. For a broom finish, a stiff bristled broom shall be drawn from the center to the edge of the pavement with adjacent strokes slightly overlapping to produce surface corrugations of uniform appearance and about 1/16 inch in depth.

   Before using either the drag or the brush, the concrete shall have set sufficiently that the surface is not grooved or gouged in the finishing operation.

5. Surface Smoothness: After all finishing is complete, the surface smoothness shall be checked with a straightedge ten (10) feet long, mounted to a long handle to permit operation from outside the pavement. The straightedge shall be placed on the surface of the pavement parallel to the center line and at intervals of no more than five (5) feet across the full width of the pavement. At conclusion of the finishing operation the surface of the pavement shall not vary from a true surface, more than one-eighth (1/3) inch in 10 feet.

   In no case shall the grade in the gutter be such that it will allow ponding of water. If the surface smoothness of the pavement after curing is found to exceed the tolerance permitted, the high spots shall be ground until they meet the tolerance. If the surface tolerance cannot be met satisfactorily by grinding, then in that event the pavement shall be removed and be replaced in conformance with the Specifications at the expense of the Contractor.

I. Curing and Protection: The concrete pavement shall be protected against excess loss of moisture, rapid temperature change, rain, water and mechanical injury during and immediately following the placing and finishing operations.

   Concrete shall be cured by protecting it against loss of moisture, rapid temperature change, and mechanical injury for at least 7 days after placement. Moist curing, waterproof paper, white polyethylene sheeting, white liquid membrane compound, or a combination thereof may be used. After finishing operations have been completed, the entire surface of the newly placed concrete shall be covered by a curing medium

approved by the Engineer. The edges of concrete slabs exposed by the removal of forms shall be protected immediately to provide these surfaces with continuous curing treatment equal to the method selected for curing the slab and curb surface.

The Contractor shall have at hand and ready to install before actual placement begins the equipment needed for adequate curing.

1. Moist Curing: Moist curing shall be accomplished by a covering of burlap or other approved fabric mat used singly or in combination. Curing mats shall be thoroughly wet when applied and kept continuously wet and in intimate contact with the pavement surface for the duration of the moist-curing period. Burlap or fabric mats shall be long enough to cover the entire width and edges of the pavement lane and lapped at joints to prevent drying between adjacent sheets.

2. Waterproof Paper or White Polyethylene: Waterproof paper or white polyethylene sheets shall be in pieces large enough to cover the entire width and edges of the slab and shall be lapped not less than 18 inches. The paper or polyethylene shall be adequately weighted to prevent displacement or billowing due to wind, and material folded down over the side of the pavement edges shall be secured by a continuous bank of earth. Tears or holes appearing in the paper or polyethylene during the curing period shall be immediately repaired.

3. Membrane: The membrane method of curing shall be applied behind the final finishing operation after all free water has disappeared from the surface. Complete and uniform coverage at the minimum rate of 150 sq. ft. per gallon shall be required. The compound shall be kept agitated to prevent the pigment from settling, and it shall be applied to the pavement edges immediately after the forms have been removed. Membrane curing will not be permitted in frost-affected areas on paving that will be exposed to de-icing chemicals within 30 days after completion of the curing period.

4. Cold-Weather Protection: Except by specific written authorization, by the City Engineer, concreting shall cease when the descending air temperature in the shade and away from the artificial heat falls below 40°F. It shall not be resumed until the ascending air temperature in the shade and away from artificial heat rises to 35°F.

   When concrete has been placed in cold weather and the temperature may drop below 35°F., straw, hay, insulated curing blankets, or other suitable material shall be provided along the line of work. Whenever the air temperature may reach the freezing point during the day or night, the material shall be spread over the concrete deep enough to prevent freezing of the concrete. Concrete shall be protected from freezing temperatures until it is at least 10 days old. Concrete injured by frost action shall be removed and replaced at the Contractor's expense.

5. Curing in Hot Weather. In periods of low humidity, drying winds, or high

temperatures, a fog spray shall be applied to concrete as soon after placement as conditions warrant in order to prevent the formation of shrinkage cracks. The spray shall be continued until conditions permit the application of a liquid curing membrane or other curing media. The Project Engineer shall make the decision when the use of a fog spray is necessary.

J. Opening Pavements to Traffic: The pavement shall not be opened to truck traffic until the field-cured concrete has attained a flexural strength of 550 psi, or a compressive strength of 3,500 psi. If such tests are not conducted, the pavement shall not be opened to automobile traffic until 3 days after the concrete was placed. Likewise, it shall not be open to truck traffic until 14 days after the concrete is placed. Before opening to traffic, the pavement shall be cleaned.

K. Cleanup: The Contractor shall, before final acceptance of the work, flush the pavement clean and remove the debris. He shall also clean out all open culverts and drains, inlets, catch basins, manhole and water main valve chambers, within the limits of the project, of dirt and debris of any kind. The cleaning and disposal of such waste material shall be considered as incidental to the construction and all costs thereof shall be included in the unit contract prices of various items of the work.

4.18 CONCRETE CURB AND GUTTER, CONCRETE GUTTER AND DRIVEWAYS

4.18.1 Description: The construction of concrete curb and gutter and concrete gutter shall be in conformance with these Specifications and with the Standard Drawings.

A. High-Back Curb and Gutter (Type A): This type of curb and gutter is predominantly used on major streets in Hyrum. Unless otherwise specified and approved, this type shall be installed along all City streets.

B. Depressed Curb (Handicap Ramp): At intersections where new concrete curbs are to be constructed, the contractor shall construct handicap curbs. The depressed curbs shall be constructed in accordance with the attached Standard Drawing.

C. Drain Gutter: In intersections where water is to surface drain through the intersection drain gutters shall be used.

D. Concrete Driveways: Concrete driveways shall conform to Standard Drawing.

4.18.2 Materials and Forms:

A. Concrete: The portland cement concrete, joint filler, reinforcing steel and curing materials shall conform to these Specifications, Portland Cement Concrete--Materials. Concrete mix for curbs shall conform to the requirements for Class 4000. Slump of the concrete mix shall not exceed three and one-half (3-1/2) inches and the air content shall be 6% ± 1.

B. Preformed Expansion and Dummy Joint Filler: See Section 4.17.

C. Curing Compounds: See Section 4.17.

D. Forms: See Section 4.17.

4.18.3 Construction Details:

A. Excavation: All excavation for curb and gutter construction shall be the responsibility of the curb and gutter Contractor. All excess excavated material shall be removed from the site within seven days after completion of the curb and gutter construction. After said time, the City may have such excess excavated material removed at the expense of the responsible Contractor.

B. Bedding: All concrete curb and gutter, concrete drain gutter and concrete driveway shall be bedded with over eight (8) inches of granular borrow or pit run borrow compacted to 95%.

C. Entrances: All driveways, alleys and other entrances disturbed by the curb and gutter construction shall be returned to a satisfactory usable condition with 95% subgrade compaction and surfacing equal to or better than the original.

D. Placing and Finishing: While the concrete is being placed and consolidated, the face of the curb shall be formed with a fixed or moving form conforming to the dimensions shown on the Hyrum City Standard Drawings. After placement, the concrete shall be consolidated by spading or vibration. The concrete shall be struck off and finished true to cross-section. As soon as the concrete has attained sufficient hardness, face forms, if used, shall be removed and the concrete finished with a wood float and trowel. Final finish shall be obtained with a brush. After final finishing, gutters and curb shall be tested with a ten-foot straightedge to see that the finished gradient is uniform. Irregularities of more than one-quarter inch in ten feet shall be corrected. No honey combing will be permitted.

E. Contraction Joints:

1. Curb and gutter shall be divided into sections of length by contraction joints.

2. A contraction joint formed by division plates shall be used in such a manner so the curb and gutter shall be divided into uniform sections of ten feet except where shorter sections are necessary for closures, but no section shall be less than four feet in length.

3. The plates shall be one-eighth inch thick, fit neatly into the forms and be set perpendicular to the surface of the concrete and shall project through the curb

head and no more than one-third of the depth of the gutter slab. The shape of the divider plate shall conform to the curb and gutter section with the exception that the lower two-thirds depth of the divider plate shall be removed.

4. This joint may be constructed by other methods that would obtain the same desired results if written authorization is first obtained from the City.

F. Expansion Joints: Non-extruding premolded expansion joint material of one- inch thickness conforming to ASTM D-1751 shall be placed at the junction of new concrete with existing concrete or existing structures at the tangent points of all alley and intersection returns as directed by the Engineer.

G. Backfilling: In fill sections a five-foot wide berm shall be constructed and compacted to 90% against the back of the curb and against the face of the gutter and sloped to the existing ground at a four to one slope. In cut sections the backfill shall be brought to the top of the curb and against the face of the gutter and compacted to 90% so as to fill the area excavated during construction. No areas within a street right-of-way may be sloped steeper than 2 to 1. No areas within 5 feet of the back of gutter may be sloped steeper than 10 to 1. Cut and fill slopes shall be rounded into existing surfaces in accordance with the Approved Plans. The Contractor shall take precautions to prevent drainage water from running or pooling behind or around the new curb and gutter.

H. Monolithic Construction: For all new construction the curb and gutter shall be constructed as one unit. For all areas where the curb heretofore has been constructed to the proper curb grades as established for such street, the gutter shall be constructed adjacent to such curb, but before placing such gutter the face of the curb shall be thoroughly scraped and brushed clear of all deleterious material. If in the opinion of the City the existing curb is in need of repair, the City may order it removed and the combined curb and gutter installed.

I. Driveway Installations:

1. All driveways constructed of concrete shall conform to the requirements of these Specifications and Standard Drawings.

2. When constructed of concrete the thickness shall not be less than seven inches in residential area and not less than eight inches in commercial areas and public alleys.

3. The subgrade shall be compacted to 95% of maximum density.

4. Driveways abutting a curb, gutter and sidewalk combination or drive over curb and gutter or driveway gutter pan or any cross gutter shall have a strip of non-extruding expansion joint material one-half inch thick, conforming to the cross-

sections of the driveway, placed between the driveway and the sidewalk or curb or cross gutter so as to provide for the expansion of the sidewalk or curb or cross gutter and the concrete driveway.

5. All aforementioned expansion material shall conform to ASTM D 1751.

J. Allowable Curb Cuts: Curb cuts will be allowed with authorization from the Engineer. The Engineer may permit valley gutter or any other types of curb cuts which, in his opinion best serve the property owner.

4.19 CONCRETE SIDEWALKS

4.19.1 Description: Concrete sidewalks shall be constructed in compliance with these Specifications and the Standard Drawings. The particular type of sidewalk to be used will be that specified in the Contract Documents.

4.19.2 Materials: The Portland cement concrete, joint filler, reinforcing steel and curing materials shall conform to the requirements specified in Section 4.16, Portland Cement Concrete. The concrete mix for sidewalk shall conform to the requirements for Class 4000. Slump of the concrete mix shall not exceed three and one-half (3-1/2) inches and the air content shall be 6% ± 1.

4.19.3 Construction Details:

A. Excavation and Subgrade: All excavation and subgrade preparation for sidewalk construction shall be the responsibility of the Contractor. The subgrade shall be compacted to 95% of maximum density.

B. Bedding: All sidewalks are to be bedded with a minimum of four (4) inches of untreated base course or six (6) inches of 3/4" minus gravel unless authorized in writing by the City.

C. Forms: The forms shall be wood or metal and shall be free from warp. Straight wood forms shall have a thickness not less than one and five-eighths inches. The forms shall be so set that the walk shall have a slope toward the street of one-quarter inch for each foot of width.

D. Thickness:

1. All walks shall be constructed of concrete and shall have a minimum thickness of four inches.

2. At residential driveways, the sidewalk thickness shall be six inches.

3. In commercial areas and public alleys the sidewalk thickness shall be increased to

eight inches.

E. Placing and Finishing:

1. In all cases the walks shall be constructed in one course.

2. The surface shall be struck off to the established grade by means of a straightedge. The surface shall then be finished true to grade with a wooden float followed by a steel trowel, and afterwards roughened lightly with a broom or brush.

3. The walk shall be cut with a marking tool forming a groove at least one-half inch deep so that the walk is divided into sections, each section not longer than five feet.

4. In no case shall a walk section exceed twenty-five square feet in area unless approved by the Engineer.

5. Care should be exercised not to over work the concrete and bring an excess of mortar to the surface.

6. The slabs shall be rounded on all surface edges to a radius of one-quarter inch.

7. The surface shall be brushed with a fiber hair brush of an approved type in a transverse direction except that at driveway and alley crossings it shall be brushed longitudinally.

8. At intersections all sidewalks shall transition into handicap ramps.

F. Adjustments: Whenever any adjustments of the grade slope, or slab marking is necessary or advisable in order to have the walk conform to existing abutting walk or other abutting structures, the adjustment shall be made only with the permission of and under the direction of the City Engineer or his representative.

G. Expansion Joints: Strips of premolded non-extruding expansion joint material one-half inch thick conforming to ASTM Dl 751 shall be placed between the side forms and to the full depth of the walk at least once in every 100 feet of walk, or as directed by the City Engineer. Similar joints shall be provided when new walk abuts other concrete walk or structures.

H. Protection from Traffic: When completed, the walk shall be protected from foot traffic and the elements for at least 72 hours, except alley and street crossings which shall be protected from light vehicular traffic for at least five (5) days and from trucks of more than one-ton gross weight for seven days.

I. Curing and Protection: The curing materials and procedures outlined in Section 4.17

shall prevail, except that white pigmented curing compound shall not be used on sidewalks. The curing agent shall be applied immediately after brushing and be maintained for a period of five (5) days.

The Contractor shall have readily available sufficient protective covering, such as waterproof paper or plastic membrane, to cover the pour of an entire day in event of rain or other unsuitable weather.

The sidewalk shall be protected against damage or defacement of any kind until it has been accepted by the City. Sidewalk that is not acceptable to the City, because of damage or defacement, shall be removed and replaced at the expense of the Contractor.

Additional requirements for curing in hot weather shall be as outlined in Section 4.17. Additional requirements for curing in cold weather shall be as outlined in Section 4.17.

4.20 STREET LIGHTING AND SIGNING

4.20.1 Description: The work to be performed consists of furnishing and installing all necessary materials to complete in place the street lights as shown on the Standard Drawings. In-place street signs shall conform to the Standard Drawings.

A. Regulations and Code: All electrical equipment shall conform to the standards of the National Electrical Manufacturer's Association (NEMA) or the Radio Manufacturer's Association, whichever is applicable. In addition to the requirements of these Specifications, the Approved Plans and the Special Conditions, all material and work shall conform to the requirements of the National Electrical Code, hereinafter referred to as the Code and the American Society for Testing Materials (ASTM).

4.20.2 Materials:

A. General: Unless otherwise indicated on the Approved Plans or specified in the Special Conditions, all materials shall be new. The major components of the street light shall consist of the products specified in Sections of these Specifications or an equivalent product. The major components of the street sign shall comply with those specified on the attached Standard Drawings.

B. Inspection: All material shall be subject to inspection after delivery to the site and during installation in the work. Failure of the Project Engineer to note faulty material during construction shall not relieve the Contractor of the responsibility for removing or replacing any such material at his own expense.

Inspection or sampling of certain materials may be made at the factory or warehouse prior to delivery to the site, when required by the City.

Material which has been rejected previous to delivery shall not be delivered to the work, and all material which has been rejected at the work shall be immediately removed from the site.
As-built drawings shall be kept by the Contractor showing exact locations of all underground conduit and connections, as well as all street lights and street signs. The as-built drawings shall be forwarded to the City upon completion of work.

C. Street Light Components:

1. Luminaire: The luminaire shall be approved by the City.

2. Pole: The pole shall be approved by the City.

   The pole package shall include full base cover, handhole with cover, pole cap, four anchor bolts, and template.

3. Base: The base shall consist of a breakaway support embedded in a finished concrete foundation with a minimum compressive strength of 4000 psi at 28 days. Foundation dimensions shall be 24 inches in diameter by 54 inches. If the base is to be placed in disturbed soil or a fill section the area should be compacted to 95% of maximum density. A sauna tube form may be used with compaction completed after the concrete has cured.

4.20.3 Construction Details:

A. General: All electrical construction shall be carried out by competent crews under the direction of a licensed electrical contractor, or by the manufacturer's representatives where so required in the Special Conditions. All workmanship shall be complete and in accordance with the latest accepted standards of the industry, as determined by the City.

   Failure of the City to note faulty workmanship during construction shall not relieve the Contractor of the responsibility for correcting the faults at his own expense.

B. Placement: Street lights and signs shall be placed in accordance with the Approved Plans. Conduit and power cables shall be placed as necessary to serve the street lights. All underground conduit and cable shall have a brightly-colored warning tape buried at least twelve inches directly above the underground conduit or cable.

4.21 TOPSOIL

4.21.1 Description: These Specifications shall apply where the Approved Plans or Special Conditions require the procurement of top soil by the Contractor for the surface finishing of an area, or where the removal and replacement of existing top soil is required for the

finishing of a specific construction area, generally in lawns or planting strips.

4.21.2 Materials:

A. Topsoil: The topsoil shall be friable surface soil typical of the topsoil common to the area, free from materials toxic to plant growth, noxious weed seeds, sage brush, rhizomes, roots, subsoil, stones, and other debris. It shall be capable of sustaining healthy plant life. One hundred percent of the topsoil shall pass through a one inch screen, unless otherwise stipulated on the Plans.

   The maximum allowable percentage of gravel retained on a No. 4 inch screen shall not exceed 20 percent by volume. Of the material passing the No. 4 inch screen, the maximum allowable percentage of gravel retained an a Number 10 screen shall not exceed 10 percent by weight.

   The topsoil shall be shown to be within allowable levels of toxic mineral contaminants, said levels to be set by the City Engineer or by the Building Official in cooperation with the Utah State Board of Health.

4.21.3 Construction Details:

A. Placement of Topsoil: Immediately prior to placing topsoil, the surface area upon which it is to be placed shall be cleaned of objectionable matter and the area smoothed and compacted to 85% maximum density. After compaction and immediately prior to spreading topsoil, the subgrade surface shall be scarified by raking or harrowing.

   Topsoil shall be placed where shown on the Approved Plans and to depths provided for in the Special Conditions, or direction of the Project Engineer. In level or slightly sloped areas the topsoil shall be leveled, raked, and compacted to 85% maximum density so as to provide a well shaped and uniform appearance. On steep slopes, the topsoil shall be left rough and uncompacted.

B. Removal and Replacement of Topsoil: Whenever it is necessary to remove topsoil with the purpose of later replacing it in the same area, the Project Engineer will direct the limits of the area and the depth of topsoil to be removed. The topsoil shall be removed in a uniform depth and be stored in such manner that it will not become mixed with unsatisfactory soils. The stored topsoil shall be replaced at a uniform depth in its original area. The topsoil shall then be shaped, leveled, and compacted to blend with the contour of adjacent ground.

   In the event that additional topsoil is required and is procured from a source other than the construction area, the Contractor shall furnish and place it in compliance with Section 4.21.3A and the intent of this subsection. Additional topsoil shall be of similar texture as native Soil.

4.22 SEEDING, LAWN REMOVAL AND REPLACEMENT

4.22.1 Description:

A. Sod Removal and Replacement by Seeding: In many areas the existing lawn is such that the removal and replacement of existing sod is not feasible. In these areas, where seeding is a part of the project and is included in the bid proposal, the Contractor shall seed all lawn areas which are damaged during construction and plant lawn where shown on the Approved Plans and/or as directed by the City.

B. Sod Removal and Replacement by New Sod: In many areas the existing lawn is such that the removal and replacement of existing sod is not feasible. In these areas, where lawn repair, using new sod, is part of the project, the Contractor shall replace all lawn areas which are damaged during construction with new sod where shown on the Approved Plans and/or as directed by the City.

C. Sod Removal and Replacement: The work shall consist of the removal and replacement of existing lawn turf by cutting the sod to be removed into convenient sized squares or strips, cutting to uniform thickness, piling and storing in a dampened condition, and finally replacing the sod in its original position. Removal and replacement shall be completed within a 24-hour period. Removed sod shall be protected from direct sunlight and intensive heating conditions. This work will be performed wherever the Special Conditions provide for such work.

   The Contractor may at his option use sod brought in from an outside source in lieu of replacing existing sod. If the Contractor so elects to use sod from an outside source, this source of supply must be approved by the Project Engineer.

4.22.2 Materials:

A. Topsoil: The soil material shall conform to the requirements of Section 4.21.

B. Replacement by Seeding:

   1. Seed: Grasses, legumes, or cover crop seed of the type hereinafter specified shall conform to the standards for "Certified" grade seed or better. Seed shall be furnished in standard containers on which shall be shown the following information:

      (1) Seed Name
      (2) Lot Number
      (3) Net Weight
      (4) Percentage of Purity
      (5) Percentage of Germination

(6) Percentage of Weed Seed Content in Inert Material Clearly Marked for Each Kind of Seed in Accordance with the Applicable State and Federal Laws.

Upon request, the Contractor shall furnish to the Project Engineer, duplicate copies of a statement signed by the vendor certifying that each lot of seed has been tested by a recognized seed testing laboratory within six (6) months before the date of delivery on the project. Seed which has become wet, moldy, or otherwise damaged in transit or storage will not be accepted.

Seed mix and rate of application shall be as specified in the Special Conditions.

2. Fertilizer: Fertilizer shall be a standard commercial grade of organic or inorganic fertilizer of the kind and quality specified herein. All fertilizers shall be furnished in standard unopened containers with weight, name of plant nutrients and manufacturer's guaranteed statement of analysis clearly marked, all in accordance with State and Federal laws. Fertilizer shall be stored in a dry and elevated location.

   Acceptable commercial fertilizer may be supplied in one of the following forms:

   (a) A dry free-flowing granular fertilizer suitable for application by agricultural fertilizer spreader.

   (b) A soluble fertilizer ground to a fineness that will permit complete suspension of insoluble particles in water, suitable for application by power sprayer.

   (c) A granular or pellet fertilizer, suitable for application by blower equipment.

   (d) A non-volatile liquid fertilizer.

   Commercial fertilizer formulation and rate of application shall be as specified in the Special Conditions.

3. Mulch: All mulch material shall contain a tackifier or it shall be crimped into the surface.

4. Straw: All straw mulch material shall be in an air dried condition free of noxious weeds, weed seeds, and other materials detrimental to plant life. Straw mulch so provided shall be suitable for spreading with mulch blower equipment.

5. Wood Cellulose Fiber: Wood cellulose fiber mulch shall be specially processed wood fiber containing no growth or germination inhibiting factors. When hydraulically sprayed on the ground, the material shall allow the absorption and percolation of moisture.

Each package of the cellulose fiber shall be packed by the manufacturer to show the air dry weight content. All fiber shall be kept dry before mixing. All mulch material must be acceptable to the Project Engineer.

6. Tackifier: The proposed tackifier shall be of a readily available commercial type manufactured specifically for the purpose of tacking seed or mulch to soils. The type of tackifier, its manufacturer, and its supplier shall be submitted for approval by Project Engineer if requested by Engineer.

7. New Sod: All sod shall comply with the State and Federal laws, including quarantines, with respect to inspection, plant diseases and insect infestation. Sod shipments shall have a certificate of origination and/or certification of approved treatment when shipment originates in known infested areas.

   All sod shall be guaranteed to survive in a healthy condition through an establishment period on ninety (90) days. The establishment period shall commence on the date of acceptance of placed sod by the Engineer. All sod which, in the opinion of the Engineer, is not in a healthy growing condition at the end of the establishment period, shall be removed and replaced by the Contractor at his own expense. Sod that is replaced shall be of the same mixture and grade as the surviving sod.

   Sod shall be mature, densely-rooted grass and shall possess the following characteristics:

   a. Uniformity.
   b. Acceptable Color.
   c. Freedom from Serious Weeds and Weed Seeds.
   d. Adequate Sod Strength for Handling.
   e. A Minimum Amount of Thatch.

4.22.3 <u>Construction Details</u>:

A. Seeding:

1. Preparation: All areas shall be scarified to a depth of two (2) inches unless otherwise specified immediately prior to topsoil distribution.

   Cultivation of the soil shall be done at right angles to the natural flow of water on the slopes. All cost and expense incurred in performing the work herein specified shall be considered incidental.

   Remove all visible rocks, clods, and debris three (3) inches or larger in any dimension. Any exposed tree roots in cut slopes shall be neatly pruned at the finished grade of the slope and the cut treated with an approved sealer.

2. Placement of Topsoil: Topsoil shall be evenly spread aver the specified areas to a minimum depth of four inches unless shown otherwise on the Approved Plans. After the topsoil has been spread, all large clods, hard lumps, rocks and litter shall be raked up, removed and disposed of by the Contractor.

   Topsoil shall not be placed when the ground or topsoil is frozen or excessively wet.

   All damage occurring to existing roadbeds, shoulders, walks, curbs or other existing adjacent structures or areas due to the Contractor's operation in hauling and placing the topsoil shall be repaired by the Contractor at his own cost and expense.

3. Compaction: All topsoil shall be compacted to 85% maximum density unless otherwise specified. Compaction shall be by sheepsfoot roller, cleated crawler tractor or similar equipment. Equipment shall be so designed and constructed to produce a uniform surface ready for sodding or seeding and mulching, and which will bond the topsoil to the underlying material. Compaction equipment shall be operated parallel to the natural flow of water on the slopes unless otherwise ordered by the Project Engineer.

4. Seeding: Seeding shall not be done during windy weather or when the ground is frozen. Seed shall be placed at the rate and mix specified in the Special Conditions. A tackifier shall be used when seeding slopes steeper than 4H:1V. Seed may be sown by one of the following methods:

   (a) An approved type, hydro-seeder which utilizes water as the carrying agent, and maintains continuous agitation. Distribution and discharge lines shall be large enough to prevent stoppage and shall be equipped with a set of hydraulic discharge spray nozzles which will provide a uniform distribution of the slurry. When only hydro-seeding is to be used the seed shall be raked into the surface. When hydro-mulching is used, a two step process of hydro-seeding followed by mulching shall be utilized.

   (b) Approved blower equipment with an adjustable disseminating device capable of maintaining a constant measured rate of material discharge that will insure an even distribution of seed at the rates specified. A tackifier shall be added to the seed mixture when blown on.

   (c) Approved power-drawn drills or seeders.

   Areas inaccessible to above method of application shall be seeded and fertilized by approved hand methods. Distribution of the material shall be uniform and at the rates specified.

It shall be the Contractor's responsibility to provide qualified personnel experienced in all phases of seeding and fertilizing operation, equipment and methods as herein specified.

5. Fertilizing: Fertilizer shall be applied by mixing with the mulch at the rates and analysis specified. The fertilizing and mulching shall be done separately from seeding.

6. Spreading Mulch: Tackifier and mulch material of the type herein specified shall be furnished, hauled, and evenly applied at the rates indicated, and shall be spread on seeded areas within forty-eight (48) hours after seeding unless otherwise spread.

7. Contractor's Responsibility for Work: The Contractor shall be responsible for all work herein described and the following requirements as directed by the Project Engineer.

   (a) Protect all areas involved against vehicles with barricades.

   (b) Reseed and fertilize areas failing to show a uniform stand of grass after germination of seed or damage through any cause before final inspection.

   Maintenance and protection during a suspension of work shall be as herein described and as directed by the Engineer.

8. Final Inspection and Acceptance: Acceptance of areas receiving seed, fertilizer and mulch as herein specified shall be based on a uniform stand of vegetation at the time of final inspection. Areas failing to show uniform stand of vegetation after germination, or damage through any cause prior to final inspection shall be reseeded as herein specified at the contractor's expense. Final inspection shall not be cane before 90 days during which the temperature reaches or exceeds 40°F. On each of the 90 days,

B. Sod Removal and Replacement: The sod shall be removed to a uniform depth of approximately two (2) inches with an approved type of sod cutter. This operation shall be performed in such manner as to insure uniform thickness of sod throughout the operation.

   As the sod scalping proceeds, the sod strips shall be placed in neat piles at convenient locations and from then on they shall be maintained in a damp condition continuously until the sod strips are replaced on the lawn. In no case shall the sod remain in piles longer than 24 hours before replacement on the lawn. Sod shall be kept shaded.

   Prior to replacing the strips of sod, the scalped area shall be carefully shaped to proper

grade, roto-tilled to a depth of six (6) inches, watered, raked smooth, and lightly compacted.

After roto-tilling, shaping and lightly compacting the finished grade, the topsoil shall be thoroughly dampened and fertilized prior to and immediately before replacing the sod. The sod shall be replaced to the required grade, taking care to butt each piece tightly against the adjacent one. Upon completion, the sod shall be dampened and rolled with a lawn roller.

All tools used shall be of a type specially designed for the work and be satisfactory to the Engineer. In no case shall sod be removed by the use of a mattock or other tool which will not meet requirements specified herein.

Wherever the construction operations have resulted in the placement or exposure of unsuitable or poorer soils in the area to be sodded, the surface shall be left low and covered with topsoil meeting all requirements of Section 4.21. Topsoil placement and replacement of the existing sod shall then be performed in the same manner as that set forth in Section 4.22.

C. New Sod:

1. Grading:

   (a) Existing Subsoil Suitable for Sod Installation: Areas to receive sod shall be cleared, grubbed and leveled to a depth of four (4) inches below grade. Two (2) inches of topsoil shall be evenly spread over and cultivated into the top six (6) inches of existing subsoil and compacted so that the compacted surface is two (2) inches below finished grade.

   (b) Existing Subsoil is Poor: Areas to receive sod shall be cleared, grubbed and leveled to a depth of six (6) inches below grade. Four (4) inches of topsoil shall be evenly spread over the existing subsoil and compacted so that the compacted surface is two (2) inches below finished grade.

2. Fertilizer: A 16-16-8 fertilizer shall be roto-tilled into the top four (4) inches of the soil at a rate of three (3) pounds per 1000 square feet. Fertilizer shall be applied no less than two (2) days prior to sod placement.

3. Sod Placement: Sod shall be placed in accordance with standard horticultural practices. Dry soil shall be moistened by sprinkling. All butt joints shall be staggered. On sloped areas the sod shall be laid with the long dimension parallel to the toe or top of slope. After placing, the sod shall be rolled and heavily watered by sprinkling.

4. Establishment: The contractor shall be responsible for watering and fertilizing the

sod during the establishment period of 90 days. Watering shall be scheduled to prevent drying of joints between sod strips. 16-16-8 fertilizer shall be applied at three (3) week intervals at the rate of six (6) pounds per 1000 square feet per application.

4.23 LANDSCAPING

4.23.1 General: This work shall consist of furnishing and planting trees, shrubs, and ground covers where shown on the plans or as established by the Engineer, all in accordance with specifications and accepted horticultural practices. Two trees, having a minimum diameter of 1-1/2 inches, will be required for each approved subdivision lot.

4.23.2 Materials:

A. Planting soil, fertilizer, organic material and seeds used for landscaping and erosion control shall meet the requirements specified in Sections 4.21 and 4.22.

B. Plants and trees: All plants and trees shall be nursery grown, healthy, vigorous, well-rooted, and shall be true to type or name as shown on the plans and shall conform to the American Standard for Nursery Stock, No. 1 grade, American Association of Nurserymen, Inc., latest edition, ASA Spec. Z 60.1 and shall be tagged in accordance with the most recent standard practice recommended by the American Association of Nurserymen and to the latest edition of Standardized Plant Names, American Joint Committee on Horticultural Nomenclature.

   All plant and trees shall comply with Federal and State laws requiring inspection for plant diseases and infestations. Inspection certificates required by law shall accompany each shipment of plants, and all plant shipments shall be inspected and passed by the Department of Agriculture. All shipments of pine nursery stock shall meet all applicable State and Federal quarantine regulations.

C. Nomenclature: Nomenclature for varieties of plants and trees shall be in accordance with the latest edition of “Standardized Plant Names” as prepared by the American Joint Committee on Horticultural Nomenclature.

D. Quality of Plant and Tree Materials: It is the intent of these Standard Specifications that all materials meet the standards as set forth herein, throughout the life of the contract. During inspections, as set forth hereinafter, all plant and tree material will be judged and rejections shall be based upon these standards.

   In determining the quality of plants and trees, the following elements shall be evaluated:

   1. Root condition.
   2. Size (above ground).

3. Insect and disease free condition.
4. General appearance (color, shape, prior pruning).

All container grown plants and trees specified in the plans shall be established in the container in which they are sold, and grown in that container sufficiently long for the new fibrous roots to have developed so that the root mass will retain its shape and hold together when removed from the container.

Balled and burlapped plants and trees shall be dug with the ball of earth in which they are growing. Ball sizes shall be of a diameter and depth required to contain enough fibrous root system for the full recovery of the plant. The ball shall be firm and unbroken.

Pruning of plants and trees shall not be done prior to delivery to the planting site except by approval of the Engineer. Pruning, when found necessary to remove damaged branches and to improve the shape and form when approved by the City, shall be accomplished after completion of individual planting operations.

E. Handling and Shipping: Plants and trees shall be packed for shipment according to standard practice for the type being shipped. The root system shall not be permitted to dry out at any time. Plants and trees shall be protected against heat and freezing temperatures, sun, wind, climatic, or seasonal conditions during transit. Plants and trees specified balled and burlapped (B & B) shall be handled by the ball of earth. Broken or "made" balls will not be acceptable. Container grown plants and trees shall be well developed with sufficient root development to hold the earth intact after removal from the container without being root bound.

F. Inspection: The Contractor shall inform the City as soon as possible, of the source of plants or trees for the project. At the City's option an inspection of all materials at the source may be required prior to shipping of plants and trees from the nursery. This inspection shall coordinate the judgment areas regarding size and quality of plant material between the Contracting Agency, the Contractor and the nursery. However, there will be no acceptance of any plant or tree during this inspection.

All plants and trees will be inspected by the City on arrival at the site or storage area for quality. These inspections shall determine the acceptance or rejection of the plants and trees based on quality as specified in Subsection D, "Quality of Plant and Tree Materials". This inspection is for quality only and does not constitute final acceptance. Plants which are rejected shall be immediately removed from the holding area and replaced by acceptable plants at the Contractor's expense.

All plants and trees will be continually inspected during planting and through the establishment period. Plants and trees may be individually rejected during this time based on mechanical damage, quality or physical change of the plant which is not normal to the plant or to the season of the year. Plants and trees which are rejected

shall be immediately removed from the project and replaced by the Contractor at his expense.

4.23.3 Construction:

A. Site Preparation: This work shall consist of all work necessary, as set forth in the contract documents, such as roadway construction, drainage facilities, grading, cleaning, etc., to prepare the area for the actual landscaping work. All work as set forth herein shall be completed and approved by the City prior to beginning any preparation of the planting areas.

B. Layout of Planting: The Contractor will designate, by means of stakes or other approved markings, the ground location of each random placed plant and tree. Areas of massed or uniform solid plantings shall be marked at their outer extremes only. The City's approval of stakeout will be required prior to the commencement of the preparation of planting areas.

   In mixed planting areas, trees shall be planted first, followed by the larger shrubs, low shrubs, and the final planting of ground covers.

C. Preparation of Planting Areas: During the preparation of planting areas, all clods, rocks, or other debris over one (1) inch (2.5 centimeters) in dimensions shall be removed from both cultivated areas and backfill material, and disposed of.

D. Planting Beds: The soil preparation shall not be initiated until all grading has been completed and the irrigation system has been installed, tested, adjusted, and accepted by the City. The ground surface within the area shall then be loosened and thoroughly pulverized to a depth of six (6) inches (15 centimeters). When required, organic matter, commercial fertilizer, or agricultural minerals and other additives shall be incorporated at the rate specified in the contract documents, and shall be thoroughly and uniformly tilled into the soil to a depth of six (6) inches (15 centimeters). The area shall then be brought to a plane in conformance to the elevations shown on the plans.

E. Planting Holes: Prior to drilling holes, the proposed location of the irrigation lines shall be designated by means of stakes or other approved markings. In the event of conflict between individual planting holes and irrigation line, the planting holes in question shall be relocated.

   All holes shall be drilled with a power auger to the dimensions specified in the contract documents. Holes shall be drilled at the location of each individual plant, the stake or marking being considered the center of the hole. The holes shall have vertical walls and horizontal bottoms.

   When required, organic matter, commercial fertilizer, or agricultural minerals and

other additives shall be incorporated at the recommended rates and shall be thoroughly and uniformly mixed with the material removed from the holes prior to backfilling. After backfilling the holes, the material shall be saturated with water to the full depth of the hole and until ponding appears in the basin. Sufficient backfill material shall be placed so that after planting and settlement has taken place, the basin will conform to the section as shown in the plans.

F. Planting: No planting shall be done in any area until the Contractor has received the City's approval that the area concerned has been satisfactorily prepared.

No more plants or trees shall be distributed within the project area on any one day than can be planted and watered on that day.

Any planting done in soil that is too wet or too dry or not properly conditioned as provided herein will not be accepted.

Nursery stakes supporting plants and trees in containers shall be removed and the plant pruned, if necessary, as specified herein, after planting.

Containers shall be cut, three times, from top to bottom and plants shall be removed from the containers in such a manner that the ball of earth surrounding the roots is not broken and they shall be planted and watered as hereinafter specified immediately after removal from the containers. Containers shall not be cut prior to delivery of the plants to the planting areas.

Balled and burlapped material shall have all strings or cords cut, and the burlap shall be laid back from the top half of the ball. This shall be done only after the plant is placed in its final position and before completion of the backfill.

Roots of plants and trees not in containers shall be kept moist and covered at all times and shall not be exposed to the air except while actually being placed in the ground.

Plants and trees shall be planted in such a manner that the roots will not be restricted or distorted. Soil shall be firmed around the roots or ball of the plant during planting operations by foot tamping or saturation with water.

Plants and trees shall be watered immediately after planting.

G. Staking and Guying: All staking and guying shall be done concurrently with the planting operation.

The method of attaching the ties to stakes and trees shall provide firm connection, but the trunk loop shall be sufficiently loose to prevent damage to the bark. It may, on occasion, be considered necessary to use number 10 gauge galvanized wire encased in at least one-half (1/2) inch (1.27 centimeters) rubber hose as tree ties, in which case

all connections shall be twisted.

H. Pruning: Pruning shall be done as determined by the City after plant materials are planted.

Pruning of evergreen coniferous plants will not be permitted except under the direction of the City.

I. Watering: The Contractor shall make his own arrangements for furnishing and applying water and shall pay all costs involved.

Valves at meters shall be kept closed at all times, except while the irrigation system is actually in use.

Precautions shall be taken during times when the irrigation system is on to prevent water from wetting vehicles, pedestrians, and pavement. Any erosion, slippage, or settlement of the soil caused by watering shall be repaired by the Contractor at his expense.

Compliance with the provisions in this section shall not relieve the Contractor of his responsibility for the replacement of plants as provided herein.

J. Tree List: The tree list included in these specifications are trees recommended for the Cache Valley area. The Contractor shall obtain approval of the City for plants and trees required or recommended for the development.

4.24 RIP-RAP

4.24.1 Description: This item shall consist of furnishing and hand placing or placing loose rip-rap in accordance with these specifications, at the locations indicated, and in conformity with the lines, grades, and dimensions shown on the Approved Plans or as directed by the City.

4.24.2 Materials: Rip-rap shall consist of durable, angular field or quarry stone of approved quality, sound, hard, and free from seams, cracks, or other structural defects.

A. Hand-Placed Rip-Rap: When hand-placed methods are used, 75% of the rock shall not be less than one-third of a cubic foot in volume nor less than 3 inches in thickness. The stones shall be graded so that a reasonably dense mass is obtained.

B. Loose Rip-Rap: The greatest dimension of 50% of the loose rip-rap stone shall be at least two-thirds but not more than one and one-half times the thickness of rip-rap specified in the Contract Documents. The stones shall be graded in size so as to produce a reasonably dense mass. Not more than 10% of the rock shall have dimension less than 0.1 the thickness of rip-rap.

4.24.3 Construction Details:

A. Hand-Placed Rip-Rap:

1. Placing: Slopes where rip-rap is used shall not be steeper than the angle of repose of the abutting material, unless otherwise indicated in the Contract Documents or as directed by the Engineer. The rocks shall be hand-placed and bedded, one against the other, and as far as practicable shall be keyed together. Any large irregularities between the stones shall be filled with spells of suitable size rammed tightly into place.

2. Finished Surface: The finished surface of the rip-rap shall present an even, tight surface, true to the lines, grades, and sections specified. The rip-rap shall extend sufficiently below ground surface, as directed by the Engineer, to secure a firm foundation.

B. Loose Rip-Rap:

1. Placing: Slopes to be protected shall be free of brush, trees, stumps and other objectionable material and dressed to a reasonably smooth surface. The stone shall be dumped into place so as to secure a rock mass with the minimum thickness and height as specified. The rock shall be manipulated to secure a regular surface of graded sizes and mass stability. Excavation as shown in the Contract Documents or as directed by the Engineer, shall be made at the toe of the slope to provide a firm foundation and protection against undercutting.

4.25 REMOVAL OF EXISTING STREET IMPROVEMENTS

4.25.1 Description: The work shall consist of the removal and disposal of various existing improvements, such as pavements, structures, pipe, curb, curb and gutter, gutter and other items necessary for the accomplishment of the improvement.
Removal of items or things not contained in this section or in other sections of these Specifications shall be considered as incidental to the construction.

4.25.2 Construction Details:

A. General: The removal of street improvements shall be conducted in such a manner as not to injure utilities and any portion of the improvement that is to remain in place. Any deviation in this matter will obligate the Contractor at his own expense, to repair, replace or otherwise make proper restoration to the satisfaction of the Project Engineer.

When sawing of concrete or combinations of rigid materials is called for in the Approved Plans or in the Special Conditions, the Contractor will be paid therefore at

the unit contract price for the quantity involved.

B. Removal of Pavement: The pavement removal shall consist of those instances where portions or all of existing pavements are being removed in conjunction with street construction and for the placing of utilities such as sewers. Because of variable underground conditions, the limits of the pavement removal cannot be accurately determined prior to actual construction.

   Pavement removal shall also consist of the removal required for narrow and shallow utility cuts in order to install light cables, conduits and similar shallow utilities.

   The Contractor shall remove existing permanent type pavement and driveway pavement shown on the Approved Plans or as directed by the Project Engineer. Permanent type pavements will be classified according to their composition and thickness as defined below, unless the Contract Documents provide otherwise.

   In the event a pavement, classified as described below, shall average more than the maximum thickness specified for its class, an additional payment will be made to cover the extra thickness removed at a mutually agreed to price or as stipulated in the Special Conditions. Where pavement removal is located in future planting areas, all pavement material and compacted base material shall be entirely removed to the native material. Prior to filling or applying topsoil the subgrade shall be scarified to a minimum of 12 inches.

   1. Pavement Removal, Class A: Class A pavement removal shall apply to all cement concrete pavement having average thickness between four (4) inches and ten (10) inches.

   2. Pavement Removal, Class B: Class B pavement removal shall apply to all pavements which have a wearing surface of asphalt concrete upon a cement concrete pavement or cement concrete base, and for which the total combined thickness of the pavement will average between seven (7) inches and twelve (12) inches.

   3. Pavement Removal, Class C: Class C pavement removal shall apply to early type pavement of a cement concrete base upon which is a brick or cobblestone wearing surface (or perhaps an additional layer of asphalt concrete upon that), and for which the total combined thickness of pavement will average between ten (10) inches and twenty (20) inches.

C. Removal of Asphalt Concrete Pavement: Removal of existing pavements such as asphalt concrete, bituminous road mix, multiple lift bituminous surface treatments and any other combinations of above described components, placed upon an earth or granular subgrade located within the roadway excavation area shall be removed. The roadway excavation area is defined as the area 1 foot back of new curbs on either side

and all areas in between.

Side street approaches to the project and street approaches at each end of the project paved with asphalt concrete having a depth of greater than two inches, on an earth or granular base and which are to be removed.

D. Removal of Curbs: Existing curbs shall be removed where shown on the Approved Plans or where encountered in the work and designated by the Project Engineer. When pavement is being removed, the curb shall be considered as pavement removal. Precast curbs and curbs of other materials which are to be removed will be further identified on the Approved Plans.

E. Removal of Curb and Gutter: Curb and gutter to be removed may be of cement concrete, or may be a cement concrete curb with a brick gutter on a cement concrete base, or may be other combinations of rigid materials. In any event it is intended that the full section shall be removed.

When curb and gutter is removed, provisions shall be made by the Contractor to channel any runoff which would normally flow in the gutter into existing drainage structures to reduce undermining and erosion during construction.

F. Removal of Cement Concrete Sidewalks: All concrete slabs that average four (4) inches or less in thickness and which are to be removed shall be considered as sidewalk removal. Pavement breakers used for this purpose shall meet the requirements outlined for pavement removal. Where concrete sawing is required, the provisions previously described shall apply. Sidewalk aprons and private walks on street grading and paving projects shall be removed to the extent necessary to provide for construction of pavements and curbs. After the curbs and pavement have been constructed, the Contractor will be required to provide proper connections and grades, as determined by the Project Engineer.

G. Removal of Catch Basins, Manholes, Curb Inlets, Sumps, Etc.: Where structures or installation of concrete, brick, blocks, etc., interfere with the construction, they shall be removed and all pipe openings shall be properly plugged watertight with Class 4000 psi, Type II concrete.

Where the structures are removed, the voids shall be backfilled with suitable job excavated material and compacted as the Project Engineer may direct, and such compaction work shall be considered as incidental to the removal work.

If the Project Engineer determines the job excavated material to be unsuitable for backfill and he, therefore, specifies or directs that backfill from another source shall be used, the payment therefore will be made at a mutually agreed to price.

The removal and disposal of wooden structures shall be considered as incidental to

the work.

H. Salvage: Unless otherwise indicated in the Approved Plans or in the Special Conditions, all castings, pipe and other material or recoverable value taken from the discarded facilities shall be carefully salvaged and delivered to the Owner in good condition and in such order of salvage as the City may direct. Materials and items deemed of no value by the City shall be removed by the Contractor and become his property to be disposed of as he wishes.

I. Waste Disposal: Unless otherwise provided in the Approved Plans, the Contractor shall provide the waste site for disposal of materials not required for the construction.

4.26 PLACEMENT AND ADJUSTMENT OF NEW AND EXISTING UTILITY STRUCTURES TO FINISH GRADE

4.26.1 Description: This work consists of constructing and/or adjusting all new and existing utility structures encountered on the project to finished grade.

4.26.2 Contractor to Schedule Work: The Contractor shall schedule his work and cooperate to the fullest extent so that structure adjustments by others can be satisfactorily accomplished. The Contractor shall do all pavement patching which may be necessary after adjustment of structures, and the cost thereof shall be considered as incidental to the adjustment of the various structures, except as modified hereinafter, and except that private utilities shall reimburse the Contractor for such patching.

4.26.3 Construction Details:

A. Adjusting of Manholes, Catch Basins, and Similar Structures:

1. General: Manholes shall be brought to proper finished grade by utilizing the same methods of construction as required for manhole construction.

2. Cement Concrete Paving Projects: Manholes, catch basins and similar structures shall be constructed. The final adjustment shall be made and cast iron frame be set after forms have been placed and checked. In placing the concrete pavement, extreme care shall be taken not to alter the position of the casting in any way.

3. Asphalt Concrete Paving Projects: On asphalt concrete paving projects, the manholes shall be adjusted prior to paving unless otherwise requested by the Project Engineer.

4. Asphalt Resurfacing Projects: Adjustment of manholes on asphalt resurfacing projects shall meet the requirement of the previous Section. Existing pavement shall be removed to the extent necessary to remove the manhole casting.

5. Storm and Sanitary Sewer or Water Projects: Manholes, catch basins, gate valve structures and other similar type structures being constructed in conjunction with sewer or water projects on graded or paved streets shall be brought to final grade as outlined previously in these Specifications.

B. Adjustment of Inlets: The final alignment and grade of cast iron frames for new and old inlets to be adjusted to grade will be established from the forms or adjacent pavement surfaces. The final adjustment of the top of the inlet will be performed in similar manner to that described for manholes.

C. Adjustment of Monuments and Cast Iron Frame and Cover: Monuments and monument castings shall be adjusted to grade in the same manner as for manholes.

D. Adjustment of Valve Box Castings: Adjustment of valve box castings shall be made in the same manner as for manholes.

E. Furnishing Castings: Where adjustment of existing manholes, catch basins, inlets, valve boxes, etc. are required and the existing castings are discarded or ordered to be salvaged by the City Engineer, the Contractor shall furnish new castings of the type specified and payment therefore will be made as specified in the Contract Documents and will be in addition to payment for making the adjustment. Ring extensions shall be in accordance with the Standard Drawings.

4.27 PAVEMENT PATCHING

4.27.1 Description: This work shall consist of the patching of various types of pavement cuts, the performance of which shall be in accordance with the requirements outlined hereinafter and as shown on Hyrum Standard Drawings.

4.27.2 Materials: All materials shall conform to the requirements specified for material in other sections of these Standard Specifications.

4.27.3 Construction Details:

A. General: Pavement patching shall be scheduled to accommodate the demands of traffic and shall be performed as rapidly as possible to provide maximum safety and convenience to public travel.

The patching and compaction of the trench backfill, and the preparation and compaction of the subgrade shall be in accordance with the requirements of the various applicable sections of these Specifications.

Before the patch is constructed all pavement cuts shall be trued so that the marginal lines of the patch will form a trapezoidal section with straight edges and slightly undercut faces. The use of a concrete saw may be required upon request by the City.

Proper signs, barricades, lights and other warning devices, as may be required by the City, shall be maintained all 24 hours of the day until the patch is completed and ready for traffic. The expense of these materials and effort shall be borne by the Contractor.

B. Cement Concrete Pavements: After the subgrade for the pavement has been compacted and constructed to line and grade, the cement concrete pavement patch shall be placed, compacted and struck off to the grade of the adjacent pavement in accordance with the pertinent provisions of Section 4.27. The Contractor shall submit for approval the type of curing compound to be used at the time of permit application. The approved curing compound shall be placed on the finished concrete immediately after finishing.

C. Asphalt Concrete Streets on Granular Base: After the subgrade has been prepared as shown on the Standard Drawings, or as directed by the Engineer, asphalt concrete pavement shall be placed to a minimum thickness of 8 inches or to the thickness of the existing asphalt pavement depth plus 1 inch, whichever is greater. The edges of the existing asphalt pavements and castings shall be painted with hot asphalt cement or asphalt emulsion immediately before placing the asphalt patching material. The asphalt concrete pavement shall then be placed, leveled, and compacted to 98% of maximum density to conform to the adjacent paved surface. Immediately thereafter, all joints between the new and original asphalt pavement shall be painted with hot asphalt or asphalt emulsion and be covered with dry paving sand before the asphalt solidifies. The material for tacking the bottom and sides of patches for asphaltic concrete shall be CRS-2 emulsion. For sealing the edges after placing the asphaltic concrete patch, RC70 cutback shall be used, the surface shall be sanded to prevent tracking.

D. Oil Mat Streets: The existing oil mat shall be uniformly trimmed to a straight line. After the subgrade has been prepared as shown on the Standard Drawing, or as directed by the Engineer, a minimum of two (2) inches of asphalt concrete pavement shall be placed and completed in the same manner as specified above.

E. Responsibility for Pavement Patching: The Contractor shall perform all work backfilling of excavations made under existing pavements, and the restoration of pavement cuts and patching, in accordance with these Specifications unless otherwise provided in the Contract Documents.

4.28 FINISHING AND CLEANUP

4.28.1 Description: After all other work embraced in the Contract is completed and before final acceptance of the Contract, the entire roadway including the roadbed, planting, sidewalk areas, shoulders, driveways, alley and side street approaches, slopes, ditches, utility

trenches, and construction areas shall be neatly finished to the lines, grades, and cross-sections shown on the Approved Plans and as hereinafter specified.

4.28.2 Construction Details: Slopes, sidewalk areas, planting areas, and roadway shall be smoothed and finished to the required cross-section and grade by means of a grading machine insofar as it is possible to do so without damaging existing improvements, trees, and shrubs. Machine dressing shall be supplemented by hand work to meet requirements outlined herein, to the satisfaction of the Project Engineer.

Upon completion of the cleaning and dressing the project shall appear uniform in all respects. All graded areas shall be true to line and grade as shown on the typical sections and as required by the Project Engineer. Where the existing planting is below sidewalk and curb, the areas shall be filled and dressed out to the walk regardless of limits shown on the Approved Plans. Wherever fill material is required in the planting area it shall be left higher to allow for final settlement but, nevertheless, the raised surface shall present a uniform appearance.

Trash of all kinds resulting from clearing and grubbing or grading operations shall be removed and legally disposed of and not placed in areas adjacent to the project. Where machine operations have broken down brush and trees beyond the lateral limits of the project, the Contractor shall remove and dispose of same at his own expense. Damage to existing vegetation shall be repaired by a qualified tree surgeon at the Contractor's expense. Pruning shall maintain the natural shape of the plant.

Drainage facilities such as inlets, catch basins, culverts, and open ditches shall be cleaned of all debris which is the result of the contractor's operations, unless the Specifications of any particular section or the Contract Documents provide otherwise.

Where, by permission, soil is dumped on private property, the Contractor will not be required to perform any work beyond that described in the Contract Documents.

All pavements and oil mat surfaces, whether new or old, shall be thoroughly cleaned. Existing improvements such as Portland cement concrete curbs, curb and gutters, walls, sidewalks, and other facilities which have been sprayed by the asphalt cement shall be cleaned to the satisfaction of the Engineer. Castings for manholes, monuments, water gates, lamp poles, vaults, and other similar installations which have been sprayed with the asphalt material shall be cleaned to the satisfaction of the Engineer.
The Contractor shall sweep the street at the conclusion of the work unless otherwise provided in the Contract Documents. Sidewalks shall be hand broomed.

On sewer and water distribution projects where all or portions of the construction is in undeveloped areas, the entire area which has been disturbed by the construction shall be shaped so that upon completion the area will present a uniform appearance, blending into the contour of the adjacent properties. All other requirements outlined previously shall be met, except that it will not be necessary to pick up more surficial rocks than is necessary

to result in the appearance of adjacent undisturbed areas unless so provided in the Contract Documents.

(This page left blank intentionally.)

(This page left blank intentionally.)

(This page left blank intentionally.)

SECTION 5

HYRUM CITY
GENERAL REQUIREMENTS
AND
SPECIFICATIONS
FOR
SANITARY SEWER INSTALLATIONS

5. GENERAL REQUIREMENTS AND SPECIFICATIONS FOR SANITARY SEWER INSTALLATIONS

5.1 GENERAL REQUIREMENTS

5.1.1 GENERAL:

The following Hyrum City "Design Standards and Construction Specifications for Sanitary Sewer Installations" were developed to establish practical, uniform design and construction of sanitary sewers in Hyrum City. These criteria are not intended to cover extraordinary situations, and in such instances, deviations from the criteria may be allowed where justified, upon approval of the City.

Sanitary sewer construction shall include the performance of all operations necessary to lay sewer pipe mains, wye branches, individual sewer laterals, manholes, test mains for leaks and all incidental work necessary to complete the work in a satisfactory manner.

5.2 DESIGN CRITERIA:

5.2.1 DESIGN REGULATIONS:

A. All sanitary sewer systems shall be designed to exclude all storm water and water from underdrain systems, roofs, streets, and other paved areas.

B. Downspout connections, foundation and basement drains, sumps and storm drain connections shall be prohibited from discharging into the sanitary sewer system.

C. Each dwelling unit shall be served by an individual lateral. "Stacked" dwelling units may be served otherwise.

D. Sewer lines including laterals shall be designed for at least 10 feet horizontal separation, measured edge to edge from any water line.

E. Sewer lines crossing water mains shall be laid to provide a minimum vertical distance of 18 inches between the outside wall of the water main and the outside wall of the sewer line.

F. All utilities paralleling the sanitary sewer shall be designed to have at least 5 feet horizontal separation, measured edge to edge of the utility. This includes storm sewers, secondary water lines, conduits of all types, telephone cable, underground power and other cables.

G. No laterals to manholes without approval of the Engineer.

5.2.2 LATERALS:

Laterals connected to the public sewers shall meet the following requirements:

A. Laterals will be of PVC, ductile iron or other material approved by the City.

B. Lateral shall have locating wire run the entire length of the lateral from the main line to the cleanout box listed in 5.2.2.F below with a minimum of 12” of extra wire coiled in the box.

B. Laterals shall have a nominal inside diameter of not less than 4 inches nor greater than 6 inches.

C. Each dwelling unit shall be served by an individual lateral. "Stacked" dwelling units may be served otherwise.

D. Laterals shall be laid at a minimum slope of 1/4-inch per foot (2%).

E. Laterals should not be located under driveways.

F. Cleanouts shall be installed at 50-foot intervals for 4" laterals, 75-foot intervals for 6" laterals, and at all changes in direction. In all cases, a cleanout shall be installed just outside of structure, or as close as practicable. This cleanout shall be housed in a typical irrigation valve box with a minimum size of 17”L x 12”W x 13”D.

G. In all cases where a lateral is under pressure, the section of lateral from the street right-of-way or easement line to the main sewer line shall be gravity. Maintenance for the line from the home to the main line shall be the responsibility of the property owner.

H. Laterals shall conform to these Hyrum City "Standards and Specifications."

5.2.3 DESIGN PERIOD:

The sewer system shall be designed to serve the estimated ultimate tributary area and shall be based on the best information available, including area master plans, current zoning regulations and approved planning and zoning reports when available.

5.2.4 DESIGN CAPACITY:

Design average flow shall be estimated at not less than 100 gallons per capita per day, including infiltration at 200 gallons per diameter inch per mile per day. To accommodate peak flows, sewers shall be designed, flowing full, to carry not less than the following contributions:

A. (1) 4-inch and 6-inch laterals: 400 gallons per capita per day.

(2) 8-inch thru 15-inch sewers: 400 gallons per capita per day.

(3) Larger than 15-inch sewers: 250 gallons per capita per day.

B. Flow from commercial, municipal and industrial connections.

C. Additional ground water infiltration, if applicable.

5.2.5 ALTERNATE METHODS OF DESIGN:

If use is made of methods of sewer design other than those described above, a complete description of methods used shall be presented to the City Engineer for approval.

5.2.6 SEWER SIZE:

All public sewers shall be 8 inches in diameter or larger.

5.2.7 SEWER DEPTH:

Sewers shall be placed deep enough to serve all basements, assuming a 2% grade on house laterals. They shall be well below frost line at all points and also the top of the sewer line shall be 2 feet lower than the bottom of any water lines placed in the same street. Minimum cover shall be 36 inches from the top of the pipe. Sewers at depths greater than 14 feet shall be given special design considerations.

5.2.8 SEWER SLOPES:

All sewers shall be designed and constructed for mean flow velocities, when flowing full, of not less than 2.0 feet per second, based on Kutter's formula using an "n" value of 0.013. The following are the minimum slopes which shall be provided; however, slopes greater than these are desirable, especially in the upper reaches of sewer systems.

Sewer Size	Minimum Slope in Feet Per 100
8"	0.40
10"	0.28
12"	0.22
14"	0.17
15"	0.15
16"	0.14
18"	0.12
21"	0.10
24"	0.08

Sewers on slopes 20 percent or steeper shall be anchored immediately downstream from bells with concrete anchors or approved equal as follows:

A. Not over 36 feet center-to-center on grades 20 percent and up to 35 percent.

B. Not over 24 feet center-to-center on slopes 35 percent to 50 percent.

C. Not over 16 feet center-to-center on slopes steeper than 50 percent.

5.2.9 SEWER ALIGNMENT:

A. Sewers shall be designed on straight alignment between manholes.

B. Sewer lines shall not be designed to run parallel to and within 5 feet either side of the curb and gutter. Special cases and variances to the standard may be approved upon recommendation by the City Engineer.

5.2.10 PIPE TRANSITIONS:

At manholes, where sewer diameters change, the flow energy gradient shall be continuous. The 0.8 depth point of the two sewers shall be placed at the same elevation, with proper allowance for any manhole head loss or as required to provide proper flow. The minimum drop through manholes shall be 0.2 feet if an alignment change of more than 45 degrees is designed.

5.2.11 MANHOLES:

A. Location: Manholes shall be installed at the end of each line, at all changes in pipe size or changes in alignment or grade; at all intersections; and at the midway point in standard blocks. In no case shall the spacing

between manholes exceed 400 feet.

Manholes shall be provided at street intersections.

Watertight, seal-down covers shall be provided in areas subject to flooding.

Manholes shall not be positioned in waterways, such as gutters.

Manholes shall not be placed within 10 feet of storm drains, catch basins or in low points where catch basins are located.

B. Inverts: Flow channels through manholes shall be shaped to conform to cross-sections and slopes of connecting sewers. Floors and channels shall be shaped such that television camera access will not be impeded.

C. Drop Connections: Drop connections shall be used whenever the elevation difference between the invert of the inflow pipe and the outflow pipe exceed 18 inches. All drop connections shall conform to the Standard Detail Drawing for "Drop Manholes." Only outside drop connections will be permitted.

D. Diameters: Manhole inside diameter shall be at least 60 inches for flow-through conditions and at least 48 inches for dead end conditions.

Manholes deeper than 16 feet shall be specially designed and approved by the City Engineer.

E. Shallow Manholes: Shallow manholes shall be required for depths less than 6 feet. See Standard Detail Drawing.

5.2.12 CLEANOUTS:

Cleanouts shall not be used as an alternative to manholes on sewer lines 8 inches in diameter and greater.

Cleanouts for laterals shall conform to Section 5.3.2-F and the Standard Detail Drawings.

5.2.13 PROTECTION OF WATER SUPPLIES:

It is generally recognized that sewers and appurtenances must be kept remote from public water supply wells and other water supply sources and structures. The following specific requirements shall be observed at all times:

A. There shall be no physical connection between a public or private potable water supply system and a sewer, or appurtenances thereto, which could permit the passage of any wastewater or polluted water into the potable supply.

B. Sewers shall be laid at least 10-feet horizontally from any existing or proposed water main. Separation distances shall be measured pipe edge to pipe edge.

C. Where the 10-foot separation stated above is not achieved, the water line shall be located above the sewer either in a separate trench, or on a bench of undisturbed earth with at least 18 inches of vertical depth between bottom of the water main and top of the sewer pipe except as specified in paragraph "D" below.

D. Where sewer and water mains must cross and the vertical separation mentioned above is not possible, both mains should be constructed of mechanical-joint ductile iron pipe, or equivalent for a distance of at least 10 feet on either side of the point of crossing.

E. The above requirements shall apply to building sewers and water service lines to buildings except that copper tubing service laterals (not plastic) may pass under sewer mains or laterals. This copper tubing must pass at least 18 inches under the sewer.

5.2.14 <u>EASEMENTS</u>:

A. Easements shall be required on all public sewer not located in dedicated roadways.

B. All easements shall be 20 feet wide minimum.

C. Easements shall extend 10 feet beyond the last manhole on a line.

D. When a sewer is located in an easement, not abutting a street right-of-way, access easements shall be provided.

E. Signed easements shall be submitted to the City along with Final Design

Plans.

5.2.15 WASTEWATER PUMPING STATIONS:

Use of wastewater pumping stations shall be avoided whenever possible. The City requires design calculations for each installation and reserves the right to require the use of specific types and makes of equipment i.e. pumps, valves, lifting systems, variable frequency drives, emergency power generation, etc. As a minimum, wastewater pumping stations shall be configured with wetwell and drywell, drywell submersible pumps, and above ground architectural structures. Wastewater pumping stations shall conform to state regulations and be approved by the City and Utah Department of Environmental Quality Division of Water Quality.

5.2.16 BORINGS:

A. Borings shall be designed and constructed in accordance with the applicable City, County, State, Federal and Railroad Standards, permits, and/or as designated on Approved Plans.

B. Steel casings for bored construction shall be steel pipe conforming to ASTM A-53 Grade B. Steel pipe shall have a minimum wall thickness of 0.375" minimum yield stress of 42,000 psi. Minimum wall thickness shall be in accordance with the following:

Diameter of Casing Under Railroads (Inches)	Nominal Wall Thickness (Inches)	
	& Highways	All Other Uses
12" - 18"	0.375	0.375
Over 18" - 22"	0.375	0.375
Over 22" - 28"	0.438	0.375
Over 28" - 34"	0.500	0.375
Over 34" - 42"	0.562	0.500
Over 42" - 48"	0.625	0.562

C. Casings under interstates shall extend from right-of-way to right-of-way. When installed with more than 15 feet of cover, the casing shall be designed to carry the extra load.

D. Casing material, size, length and invert elevations shall be shown on Final Design plans.

E. Sewer pipe material shall be shown on Final Design plans.

F. Use redwood skids or approved prefabricated plastic casing skids throughout the length of the pipe tied at every pipe diameter length to brace pipe installed in casing to prevent shifting or flotation during backfilling of annular ring between the casing and carrier pipe.

G. The annular space between the casing and sewer pipe may require filling with sand, "pea" gravel, or Portland Cement grout.

H. The ends of the casing shall be sealed and watertight as specified on Final Design plans.

I. Install pipe barrels to rest upon support blocks with the pipe bells clearing the casing invert by at least 1/2".

J. The bored portion of the sewer should be completed before construction of the adjacent portions to allow for discrepancies in alignment and grade which may occur during the boring operation.

5.2.17 PREVENTION OF GROUNDWATER MIGRATION:

The Engineer shall consider methods to prevent the continuous migration of groundwater along the trench line.

5.3 MATERIAL REQUIREMENTS:

5.3.1 GENERAL:

Unless specifically designated otherwise in each case, all materials and equipment furnished for permanent installation in the work shall conform to applicable standard specifications and shall be new, unused and undamaged when installed or otherwise incorporated in the work. No material or equipment shall be used by the Contractor for any purpose other than that intended or specified. All materials not conforming to these specifications shall be specifically approved in writing by the City Engineer prior to delivery to the jobsite.

Any material or equipment found by the Inspector not conforming to City Standards and Specifications is subject to rejection.

5.3.2 SEWER PIPE:

5.3.2.1 CONCRETE SEWER PIPE:

A. Materials: All concrete pipe shall be made using Type V cement. Admixtures and pozzolans may be used only with approval of City Engineer.

B. Non-Reinforced Concrete Pipe:

1. Shall be Class 3 non-reinforced concrete sewer pipe conforming to ASTM C-14.

2. Joints shall be of the bell-and-spigot, compression type rubber gasket design conforming to ASTM C-443.

C. Reinforced Concrete Pipe:

1. Shall be used for sanitary sewers 18 inches in diameter and larger.

2. Shall be Class III, minimum, reinforced concrete sewer pipe conforming to ASTM C-76. Reinforcement shall be circular.

3. Joints shall be of the bell-and-spigot, compression type rubber gasket design conforming to ASTM C-443.

5.3.3 DUCTILE IRON SEWER PIPE:

5.3.3.1 Ductile Iron Pipe: Shall be a minimum wall thickness of Class 51 and conform to ASTM A-746. Cement-mortar or bituminous lining shall be specified on the Approved Plans.

5.3.3.2 Fittings: Shall be ductile iron and conform to ANSI A21.10. Fittings shall be consistent with the specified pipe.

5.3.3.3 Joints: Shall conform to ANSI A21.11 and shall be mechanical type.

5.3.4 POLYVINYL CHLORIDE (PVC) PIPE:

A. Materials: All PVC sewer pipe shall be made from PVC plastic conforming to ASTM D-1784 Class 12454-B or 12454-C.

B. PVC Sewer Pipe: PVC sewer pipe will be permitted for installation up to 27 inch diameter and shall conform to the requirements of ASTM D-3034,

Class SDR 35 for pipe sizes 4" thru 15" and ASTM F-679 for pipe sizes 18" thru 27".

C. Joints: Joints shall be bell-and-spigot compression type with flexible elastomeric seals conforming to the requirements of ASTM D-3212.

D. Fittings: All fittings shall conform to ASTM D-2241. The strength class shall be not less than the strength class of any adjoining pipe.

E. Low-Head Pressure PVC Sewer Pipe: Shall conform to AWWA C-900. Minimum wall thickness shall be DR-18 or Pressure Class 150. Joints shall be bell-and-spigot type with integral bell gasketed joints.

F. Installation: The pipe shall be installed in accordance with the requirements of ASTM D-2321 and as specified herein and as shown on the "Pipe Installation Detail" contained herein.

5.3.5 MANHOLES:

5.3.5.1 GENERAL:

Manholes shall be watertight, precast, reinforced manholes, complete with adapter rings, frame, cover, pipe connections, ladder, concrete sections, cast-in-place base and prefabricated base. Monolithic concrete manholes may be allowed subject to approval by the City.

5.3.5.2 PRECAST REINFORCED CONCRETE MANHOLES:

Manholes shall conform to ASTM C-478 and the Standard Detail Drawing for "Precast Manholes".

Precast base sections shall include a base riser section with integral floor and shall be supplied with a flexible pipe connector conforming to ASTM C-923. Precast reinforced concrete cone sections shall be of the ECCENTRIC type.

Manholes deeper than 16 feet shall have precast reinforced concrete cone sections of the ECCENTRIC type.

All joints and lift holes shall be sealed with non-shrinking grout or a continuous bead of bituminastic material. In wet areas both sides of the joint shall be grouted.

5.3.5.3 CAST-IN-PLACE CONCRETE MANHOLES:

Cast-in-place bases shall have a 28-day minimum compressive strength of 2500 psi and contain not less than 5-1/2 bags of Type II or V cement per cubic yard and shall conform with the Standard Specification for Portland Cement ASTM C-150.

Cast-in-place bases over live main lines shall have a 24-hour cure period before stacking sections on the poured base.

Wall, cone sections and risers shall be precast reinforced concrete conforming to ASTM C-478 and the Standard Detail Drawing for "Cast-in-Place Manholes". Precast reinforced concrete cone sections shall be of the ECCENTRIC type.

All joints and lift holes shall be sealed with non-shrinking grout or a continuous bead of bituminastic material. In wet areas both sides of the joint shall be grouted.

Manholes deeper than 16 feet shall have precast reinforced concrete cone sections of the ECCENTRIC type.

5.3.6 MANHOLE CASTINGS:

All castings shall be cast iron rings and covers conforming to ASTM A-48 Class 30. Castings shall be cleaned and painted with an asphalt coating prior to delivery to the site. All castings shall have a combined minimum weight of 400 pounds with the cover approximately 150 pounds and the ring approximately 250 pounds. The foundry name and casting number shall appear on the casting. All castings shall be made in the U.S.A. or be approved by the City Engineer.

Covers shall be in accordance with the following:

A. Covers shall be 24 inches in diameter.

B. Covers shall be vented with a pick-hole for opening. Vent holes shall not be larger than 5/8" diameter.

C. All covers shall be marked "SEWER".

D. Watertight seal down covers shall be of the gasket and bolt down type, with countersunk, hexagonal bolts.

5.3.6.1 MANHOLE STEPS:

Manholes that are more than 4 feet deep shall be provided with steps, either driven or cast-in-place. Manhole steps shall be plastic encapsulated steel or fiber glass reinforced and be spaced no more than 16-inches on center.

5.4 CONSTRUCTION REQUIREMENTS:

5.4.1 GENERAL:

5.4.1.1 MATERIALS HANDLING:

All sewer pipe, manhole sections, castings and appurtenances shall be transported, handled and stored in a manner which will insure proper installation in an undamaged condition. The Contractor shall replace all material found to be defective or which has been damaged. This includes the replacement of material found to be defective prior to expiration of the guarantee period.

5.4.1.2 INSPECTION:

All work and materials, from the beginning of the construction until the completion and acceptance of the proposed project shall be subject to inspection by Hyrum City or its authorized representative, at their convenience. The Inspector shall have access to the work at all times. Any work found by the Inspector not conforming to Approved Plans and/or these City "Standards and Specifications" is subject to rejection.

The Contractor shall notify the City 48 hours prior to the start of construction.

5.4.2 TRENCH EXCAVATION:

5.4.2.1 GENERAL:

The work included under "Trench Excavation" shall include: every operation necessary for excavation of all materials of whatever nature within the designated limits of the trenches; maintaining the excavation by shoring, bracing or other accepted methods and its removal; providing for the uninterrupted flow of surface water or sewage during construction; and protecting all pipes, conduits, culverts, bridges and all other public and private property which may be endangered by the work.

5.4.2.2 TRENCHING:

A. Alignment: Trench excavation for pipe installation shall be performed to

the alignment and grade as indicated on the plans or as required by the City Engineer.

B. Tunneling: Tunneling or boring will be required to preserve existing pavements.

C. Pavement Removal (if permitted by written approval of the City): All pavement removal shall be in accordance with the applicable City, County or State Standards and permits.

D. Trench Width: Trenches shall be excavated to a width which will provide adequate working space for proper pipe installation, jointing and embedment. Minimum sidewall clearance shall be 6 inches and the maximum sidewall clearance shall be 12 inches, measured from the outside wall of the installed pipe at a depth of 12 inches above the pipe.

E. Limitation of Excavation: Except by expressed written permission of the City, the maximum length of open trench shall be 300 feet, or the distance necessary to accommodate the amount of pipe installed in a single day (including open excavation, pipe laying and appurtenances, construction and backfill which has not been temporarily resurfaced).

F. Trenching by Machine or by Hand: The use of mechanical equipment will be permitted except in places where machines may cause damage to existing structures above or below ground, in which case, hand methods shall be employed.

G. Structure Protection: The Contractor shall provide temporary support, adequate protection and maintenance of all underground and surface structures, pipes, drains, sewers and other obstructions affected by the construction work. Any structure that has been disturbed shall be restored or replaced.

5.4.2.3 DEWATERING:

All excavation shall be dewatered before any construction is undertaken therein. Concrete shall be placed only upon dry, firm foundation material and pipe shall be laid only in dry trenches.

5.4.2.4 BLASTING:

The Contractor's responsibility with respect to the use of explosives during blasting includes compliance with all laws, rules and regulations of the Federal,

State, the City and the insurer, governing the keeping, storage, use, manufacture, sales, handling, transportation or other distribution of explosives. All operations involving the handling, storage and use of explosives shall be conducted with every precaution by trained, reliable workers under satisfactory supervision. Blasts shall not be fired until all persons in the vicinity have had ample notice and have reached positions out of danger there from. The Contractor shall advise the Engineer, all utility companies, the Hyrum City, City Police, the Cache County Public Works Department, the Cache County Sherriff's Department and any public body that should be advised in advance as to when and where charges are to be set off.

5.4.2.5 SAFETY:

A. Excavations shall be performed, protected and supported as required for safety and in the manner set in the Chapter, "Excavations, Trenching and Shoring" of the Utah Occupational Safety and Health Standard for Construction. Additional precautions shall be implemented if deemed necessary by the City and shall be at the expense of the Contractor.

B. The Contractor shall furnish and maintain all necessary safety equipment, such as barrier signs, warning lights and guards to provide adequate protection for persons and property during all phases of construction.

C. The Contractor shall give reasonable notice to the owners of public or private property and utilities when such property and utilities are within the construction area.

D. The Contractor shall at all times observe and comply with all Federal, State and local laws, ordinances and regulations which will in any manner affect the work.

5.4.3 PIPE EMBEDMENT:

5.4.3.1 GENERAL:

The pipe shall be carefully bedded as specified on Approved Plans and/or shall meet the requirements of these City "Standards and Specifications".

5.4.3.2 RIGID PIPE:

A. Suitable Subgrade: The trench bottom shall be constructed to provide a firm and stable support for the entire length of the pipe. The pipe subgrade shall be shaped to fit the bottom of the pipe for a width of ½ the

diameter of the pipe. Each joint shall be properly bedded to insure uniform and continuous bearing along the pipe. Initial backfill shall be placed a minimum of 12 inches above the top of the pipe. Selected backfill material consisting of earth or sand, free of stones larger than 2-1/2 inches, hard clods, frozen material or other debris shall be placed in the trench simultaneously on each side of the pipe in 6 inch lifts for the full width of the trench in such a manner as not to damage or disturb the pipe. The density of subgrade material shall be ninety-five percent (95%) of maximum density as determined by ASTM D-1557 (Modified Proctor).

B. Unsuitable Subgrade: Whenever unsuitable subgrade material is encountered that requires over-excavation (excavation more than 6 inches below the bottom of the pipe) trenches shall be over-excavated at least 1/4 the diameter of the pipe (6 inches minimum) in depth and stabilized with 1/2" to 1-1/2" clean angular rock. Bedding material shall then be placed in compliance with Section 5.4.3.3.

5.4.3.3 RIGID PIPE BEDDING MATERIAL:

Bedding material of 6 inches minimum shall be required. This material shall be 1/4" to 1" clean, angular rock. This same material shall be used for haunching. Haunching shall be placed to the spring line of the pipe. Selected backfill material consisting of earth or sand, free of stones larger than 1 (one) inch, hard clods, frozen material or other debris shall be placed in the trench simultaneously on each side of the pipe for the full width of the trench in such a manner as not to damage or disturb the pipe. The density of bedding material shall be ninety-five percent (95%) of maximum density as determined by ASTM D-1557 (Modified Proctor).

5.4.3.4 FLEXIBLE PIPE BEDDING MATERIAL:

Bedding, one fourth the diameter of the pipe (6" minimum) shall be required. This material shall be 1/4" to 1" clean, angular rock. This same material shall be used for haunching. Haunching shall be placed to the spring line of the pipe. Selected backfill material consisting of earth or sand, free of stones larger than 3/4 inch, hard clods, frozen material or other debris shall be placed in the trench simultaneously on each side of the pipe for the full width of the trench in such a manner as to not damage or disturb the pipe. The density of backfilled material shall be 95% of maximum density in roadway areas and 90% of maximum density in off-road areas as determined by ASTM D-1557 (Modified Proctor).

5.4.3.5 REQUIRED MATERIAL ONE (1) FOOT ABOVE THE PIPE:

Material placed for a minimum depth of one foot above the top of the pipe shall meet the same requirements for bedding rigid or flexible pipe including quality of material and compaction.

5.4.4 PIPE INSTALLATION:

5.4.4.1 GENERAL:

This section covers the installation of all sanitary sewer pipe, fittings, manholes and appurtenances. No connection to existing structures shall be made without approval of the City.

5.4.4.2 PIPE LAYING:

All work shall be in accordance with the following related standards and these specifications.

A. Concrete Sewer Pipe: As per manufacturer's recommendations for pipe installation.

B. Ductile Iron Pipe: AWWA C-600 "Installation of Gray and Ductile Cast-Iron Water Mains and Appurtenances".

C. PVC Sewer Pipe: ASTM D-2321 "Standard Recommended Practice for Underground Installation of Flexible Thermoplastic Sewer Pipe". ASTM D-2855 "Standard Recommended Practice for Making Solvent-Cement Joints with PVC Pipe and Fittings".

D. General Requirements:

1. Piping shall be laid to the alignment and grades indicated on approved construction drawings within the following limits provided that such variation does not result in a level or reverse grade:

Alignment	1 inch per 100 feet
Grade	+/- ½ inch

2. Install pipe of size, material, strength, class and joint type with embedment as shown on the Approved Construction Plans and

conforming to these Hyrum City "Standards and Specifications".

3. Pipe shall be laid in a straight line at a uniform grade between manholes.

4. Pipe laying shall begin at the lowest elevation and proceed upstream with the bell end of bell-and-spigot pipe positioned upstream.

5. The interior of all pipe and fittings shall be thoroughly cleaned before installation and shall be kept clean until the work has been accepted.

6. Pipe shall not be laid in water or under unsuitable weather or trench conditions.

7. All field cuts shall be made at right angles to the axis of the pipe. All pipe shall be filed to remove roughness.

8. All connections between two piping materials or between two field cuts of the same material shall be made with adapters designed and intended for that specific purpose and shall be approved by the City.

9. All joint preparation and jointing operations shall comply with the recommendation of the pipe manufacturer.

10. Whenever pipe laying is stopped, the open end of the pipe shall be plugged and or glued with a watertight plug and the trench shall be properly backfilled to protect the pipe from floating. Said plug shall be constructed to prevent plug migration into the pipe using mechanical stops. Inflatable plugs or other devices that rely solely on interior pipe friction are not allowed.

11. If adjustment of position of a pipe length is required after being laid, it shall be removed and re-jointed.

12. Any pipe that has floated shall be removed from the trench and the pipe shall be re-laid as directed by the City.

13. In addition to the above general requirements, all pipe installation shall comply with the specific requirements of the pipe manufacturer.

5.4.5 TRENCH BACKFILL:

5.4.5.1 GENERAL:

The work included under "Trench Backfill" shall include every operation above the pipe embedment zone. The density of backfilled material shall be 95% of maximum density in roadway areas and 90% of maximum density in off road areas as determined by ASTM D-1557 (Modified Proctor).

5.4.5.2 BACKFILLING:

All backfilling shall be in accordance with the applicable City, County or State Standards, permits and as designed on the Approved Plans. On-site materials may be used for backfilling if approved by the City. All construction within State rights-of-way must have the approval of UDOT including backfill material and placement.

5.4.5.3 PAVEMENT REPLACEMENT:

All pavement replacement shall be in accordance with the applicable City, County or State Standards, permits and/or as designated on Approved Plans.

5.4.6 MANHOLES:

5.4.6.1 GENERAL:

Manholes shall be constructed at the locations indicated and in accordance with details as shown on the Approved Plans and/or Standard Detail Drawings.

5.4.6.2 SUBGRADE:

Manholes are to be constructed on a stable foundation capable of supporting the loads imposed.

5.4.6.3 MANHOLE BASE:

A. Cast-in-Place Bases:

1. The base shall be a continuous pour of concrete.

2. Cast-in-place bases shall be at least 6 inches in thickness below the invert and shall extend at least 6 inches radially outside of the outside dimensions of the precast manhole wall section. The base shall extend at least 6 inches above the bottom of the wall section on the outside of the wall section.

3. The initial precast wall section shall be supported on concrete blocks and adjusted to proper alignment and grade prior to pouring of the base.

4. The precast wall section shall not bear directly on any of the pipes.

B. Precast Base Sections: Precast base sections shall be placed so as to be fully and uniformly supported in proper alignment.

5.4.6.4 INVERTS:

All inverts, precast bases, cast-in-place bases or connections to existing manholes shall meet the following requirements:

A. Invert channels shall be smooth with a uniform grade from inflow to outflow pipe inverts.

B. Minimum drop through manholes shall be 0.2 feet at all alignment changes of 45 degrees or greater.

C. Changes in flow direction shall be smooth, uniform and made with the longest radius possible.

D. The cross-sectional shape of the invert channels shall match the lower halves of the inflow and outflow pipes.

E. All openings around pipes shall be grouted to form a permanent watertight seal such as with grout.

F. The pipe shall protrude into the manhole a maximum of 4 inches.

5.4.6.5 WALL SECTIONS:

Precast sections shall be placed and aligned to provide vertical sides.

5.4.6.6 JOINTS:

All joints between sections, grade rings and castings shall be sealed with a continuous bead of watertight bituminastic material or non-shrinking grout. All manholes shall have joints and lift holes grouted on the outside of the manhole in addition to standard sealing procedures.

5.4.6.7 BACKFILLING:

Backfill according to Section 5.4.5.2.

5.4.6.8 PLACING CASTINGS:

A. In Roadways: Top of castings shall be set parallel to finished road surface. Castings shall be fully and uniformly supported. Wedges or shims used to elevate castings shall be brick or metal with concrete placed for uniform support. Collars around manholes shall be either a concrete collar, 9 inches wide minimum, or an asphalt hot-mix to match existing paving.

B. Off Roadways: All manholes shall be set to the grade shown on Approved Plans or as directed by the City Engineer or Inspector.

5.4.6.9 STUBS:

All stubs shall be plugged with watertight plugs at the end of pipes outside of the manhole and marked with 2x6 or 4x4 post.

5.4.6.10 OVER EXISTING SEWERS:

Manholes to be built on an existing sewer shall be constructed in such a manner as will not disrupt service of the existing sewer. The manhole base, walls and invert shall be completed before the top half of the sewer pipe is cut or broken away. Rough edges of the pipe thus exposed shall be grouted in such a manner as to produce a smooth and acceptable finish. Any portion of the existing sewer damaged shall be repaired or replaced by the Contractor.

5.4.6.11 PROTECTION DURING CONSTRUCTION:

A plywood bottom or plugs shall be placed in manholes during construction to prevent debris from entering sewer lines.

5.4.6.12 DROP MANHOLES:

Drop manhole connections, as indicated on Approved Plans or as required whenever the elevation differences between the flow lines of the inflow pipe and the outflow pipe exceed 18 inches, shall conform to the Standard Detail Drawing for "Drop Manholes" or Approved Plans. All drop manholes shall be constructed with an outside drop unless specifically authorized by the City.

5.4.7 LATERALS:

5.4.7.1 GENERAL:

This section covers the connection of laterals to main sewer lines. Any alterations to this specification shall be approved by the City prior to connection.

5.4.7.2 CONNECTION REQUIREMENTS:

A. Type of Connection:

1. In all cases, a manhole shall be used to connect sewer lines 8 inches and larger to existing sewer mains.

2. The connection of sewer laterals to sewer mains shall be made by installing a "wye" branch or a "saddle" fitting or INSTA TEE made specifically for lateral-sewer main connections. "Saddle" fittings shall be banded securely onto the pipe with stainless steel bands. The hole cut into the sewer line wall shall be sized to avoid any flow restrictions between the fitting and pipe and shall be cored neatly. “Wye” and “tee” saddles shall be PVC. Any other material must be approved by the City.

B. Installation: All lateral connections shall be in accordance with these City "Standards and Specifications":

1. All connections shall be left uncovered until inspected by the City Inspector.

2. Service connections shall be bedded, backfilled and compacted as per pipe specifications or as directed by the City Inspector.

3. All sewer lines shall remain in service while connections are made.

4. Any damage to existing sewer manholes or lines during connections shall be corrected by the Contractor as directed by the

City.

5. The invert of all sewer laterals at the point of connection shall be at or above the spring line of the sewer main.

5.4.7.3 LATERAL REQUIREMENTS:

A. Installation:

1. Material and construction requirements of laterals shall be in accordance with these City "Standards and Specifications" and the Standard Detail Drawing for "Typical Service Connection".

2. The City shall be notified 24 hours prior to installation of the sewer lateral.

3. 4 inch laterals shall be laid at a minimum slope of 2%. Variations are to be reviewed by the City Inspector.

5.4.8 ACCEPTANCE TESTS:

5.4.8.1 GENERAL:

The Contractor shall perform all pipe and line flushing and testing of installed pipelines and televising the installation. The Contractor shall notify the City 48 hours in advance of any proposed testing operation. After the Contractor has cleaned the lines he shall give the City 48 hours advance notice that the system is ready for air testing.

Visual inspection, air leakage, deflection and television inspection shall be performed on all installed sewer lines prior to acceptance. Additional tests may be required by the City. Defects designated by the City Engineer or Inspector shall be repaired prior to acceptance of the sewer lines.

5.4.8.2 CLEANING:

A. Public Sewer Lines: Each section of sewer line between manholes shall be straight and uniformly graded with no damaged pipe, misaligned or displaced joints or other defects. All sections of pipe shall be cleaned with a pressure jet to remove all dirt, debris and obstructions.

B. Laterals: All connections, lines and appurtenances shall be examined by

the City prior to backfilling. All sections of pipe shall be free of dirt, debris and obstructions.

5.4.8.3 AIR TESTS:

A. Requirements: Following cleaning an "Air Test" shall be performed on the full length of each public sewer line installed with the following requirements:

1. The Contractor shall give the City 48 hours notice of any test to be performed on the system.

2. All air tests shall be observed by the Inspector, unless the air test is performed by a "Testing Firm" which the City and City Engineer approves prior to the testing.

3. Each section tested shall be noted on an "Air Test" form to be submitted to the City. Acceptances, failures, reasons for failure and retests shall be shown on the form.

4. All sewer pipe shall be tested after the completed backfill.

5. All air tests are to include laterals when installed in conjunction with the sewer main.

6. All stubs are to be air tested.

7. All repairs indicated by any unsuccessful tests shall be made and the tests repeated until the successful performance of all tests is achieved.

B. Method of Testing: The method of "Air Testing" gravity sewer lines shall be as follows:

1. Clean test section by water jet.

2. Plug all pipe outlets with suitable test plugs bracing each plug securely if needed.

3. Raise the internal pressure in the test section to 4.0 psig.

4. After the pressure is reached, allow the pressure to stabilize. This usually takes 2 to 5 minutes, depending on the pipe size.

5. Disconnect the air supply and allow the test pressure to decrease to no less than 3.5 psig. Starting pressure may be greater than 3.5 psig.
6. Determine the time that is required for the internal air pressure to drop from 3.5 psig to 2.5 psig.

7. If the time period is less than the Minimum Test Time Required (see attached ASTM minimum test time chart) locate and repair problem and retest.

5.4.8.4 DEFLECTION TEST:

All flexible and semi-rigid pipe shall be tested for deflection, joint displacement, or other obstruction by passing a rigid mandrel through the pipe by hand, not less than 30 days after completion of the trench backfill, but prior to any resurfacing. The mandrel test shall comply with the specific procedures required in Section 306-1.4.6 of the SSPWC, except for the additional provision that the mandrel shall be a full circle, solid cylinder, or a rigid, non-adjustable, odd-numbered leg (9 leg minimum) steel cylinder, approved by the Engineer as to design and manufacture.

TABLE 1
SPECIFICATION TIME REQUIRED FOR A 1.0 PSIG PRESSURE DROP
FOR SIZE AND LENGTH OF PIPE INDICATED FOR Q = 0.0015

Pipe Dia. (in.)	Min. Time (min: sec)	Length for Min. Time (ft)	Time for Longer Length (sec)	Specification Time for Length (L) Shown (min:sec)							
				100 ft	150 ft	200 ft	250 ft	300 ft	350 ft	400 ft	450 ft
4	3:46	597	.380 L	3:46	3:46	3:46	3:46	3:46	3:46	3:46	3:46
6	5:40	398	.854 L	5:40	5:40	5:40	5:40	5:40	5:40	5:42	6:24
8	7:34	298	1.520 L	7:34	7:34	7:34	7:34	7:36	8:52	10:08	11:24
10	9:26	239	2.374 L	9:26	9:26	9:26	9:53	11:52	13:51	15:49	17:48
12	11:20	199	3.418 L	11:20	11:20	11:24	14:15	17:05	19:56	22:47	25:38
15	14:10	159	5.342 L	14:10	14:10	17:48	22:15	26:42	31:09	35:36	40:04
18	17:00	133	7.692 L	17:00	19:13	25:38	32:03	38:27	44:52	51:16	57:41
21	19:50	114	10.470 L	19:50	26:10	34:54	43:37	52:21	61:00	69:48	78:31
24	22:40	99	13.674 L	22:47	34:11	45:34	56:58	68:22	79:46	91:10	102:33
27	25:30	88	17.306 L	28:51	43:16	57:41	72:07	86:32	100:57	115:22	129:48
30	28:20	80	21.366 L	35:37	53:25	71:13	89:02	106:50	124:38	142:26	160:15
33	31:10	72	25.852 L	43:05	64:38	86:10	107:43	129:16	150:43	172:21	193:53
36	34:00	66	30.768 L	51:17	76:55	102:34	128:12	153:50	179:29	205:07	230:46

TABLE II
SPECIFICATION TIME REQUIRED FOR A 0.5 PSIG PRESSURE DROP
FOR SIZE AND LENGTH OF PIPE INDICATED FOR Q = 0.0015

Pipe Dia. (in.)	Min. Time (min: sec)	Length for Min. Time (ft)	Time for Longer Length (sec)	Specification Time for Length (L) Shown (min:sec)							
				100 ft	150 ft	200 ft	250 ft	300 ft	350 ft	400 ft	450 ft
4	1:53	597	.190 L	1:53	1:53	1:53	1:53	1:53	1:53	1:53	1:53
6	2:50	398	.427 L	2:50	2:50	2:50	2:50	2:50	2:50	2:51	3:12
8	3:47	298	.760 L	3:47	3:47	3:47	3:47	3:48	4:26	5:04	5:42
10	4:43	239	1.187 L	4:43	4:43	4:43	4:57	5:56	6:55	7:54	8:54
12	5:40	199	1.709 L	5:40	5:40	5:42	7:08	8:33	9:58	11:24	12:50
15	7:05	159	2.671 L	7:05	7:05	8:54	11:08	13:21	15:35	17:48	20:02
18	8:30	133	3.846 L	8:30	9:37	12:49	16:01	19:14	22:26	25:38	28:51
21	9:55	114	5.235 L	9:55	13:05	17:27	21:49	26:11	30:32	34:54	39:16
24	11:20	99	6.837 L	11:24	17:57	22:48	28:30	34:11	39:53	45:35	51:17
27	12:45	88	8.653 L	14:25	21:38	28:51	36:04	43:16	50:30	57:42	46:54
30	14:10	80	10.683 L	17:48	26:43	35:37	44:31	53:25	62:19	71:13	80:07
33	15:35	72	12.926 L	21:33	32:19	43:56	53:52	64:38	75:24	86:10	96:57
36	17:00	66	15.384 L	25:39	38:28	51:17	64:06	76:55	89:44	102:34	115:23

5.4.8.5 VACUUM TESTING MANHOLES BY THE NEGATIVE AIR PRESSURE TEST:

The procedure for vacuum testing manholes by the negative air pressure test shall be as follows:

All lift holes shall be plugged.

All pipes entering the manhole shall be temporarily plugged, taking care to securely brace the pipes and plugs to prevent them from being drawn into the manhole.

The test head shall be placed at the top of the manhole in accordance with the manufacturer's recommendations.

A vacuum of 10 inches of mercury shall be drawn on the manhole, the valve on the vacuum line of the test head closed and the vacuum pump shut off. The time shall be measured for the vacuum to drop to 9 inches of mercury.

The manhole shall pass if the time for the vacuum reading to drop from 10 inches of mercury to 9 inches of mercury meets or exceeds the values indicated in Table 1 below.

If the manhole fails the initial test, necessary repairs shall be made by an approved method. The manhole shall then be retested until a satisfactory test is obtained.

TABLE 1
MINIMUM TEST TIMES FOR VARIOUS MANHOLE DIAMETERS

Depth (ft)	Diameter, inch								
	30	33	36	42	48	54	60	66	72
	Time, s								
8	11	12	14	17	20	23	26	29	33
10	14	15	18	21	25	29	33	36	41
12	17	18	21	25	30	35	39	43	49
14	20	21	25	30	35	41	46	51	57
16	22	24	29	34	40	46	52	58	67
18	25	27	32	38	45	52	59	65	73
20	28	30	35	42	50	53	65	72	81
22	31	33	39	46	55	64	72	79	89
24	33	36	42	51	59	64	78	87	97
26	36	39	46	55	64	75	85	94	105
28	39	42	49	59	69	81	91	101	113
30	42	45	53	63	74	87	98	108	121

5.4.8.6 TELEVISION INSPECTION:

The Developer or Contractor, prior to final acceptance by the City, shall have the new facilities televised and provide the City with a VHS video cassette for the City to review. The City will notify the Developer or Contractor of the condition thereof. The Contractor shall thereupon immediately make any repairs or corrections required by the City. The video cassette shall become a part of the City's records.

5.4.9 CLEANUP:

All surplus materials, tools and any temporary structures shall be removed from the construction site by the Contractor. All rubbish, dirt or excess earth from the excavation shall be removed by the Contractor at the earliest possible date and the construction site left clean and acceptable to the construction Inspector.

ASTM MINIMUM TEST TIME

Time in Minutes Required for Pressure Drop of 1 psi

Length	4"	6"	8"	10"	12"	15"	18"	21"	24"
50	0.15	0.35	0.60						
75	0.35	0.53	0.90						
100	0.30	0.70	1.20	1.5	1.8	2.1	2.4	3.6	4.8
125	0.38	0.88	1.50						
150	0.45	1.05	1.80						
175	0.53	1.23	2.10						
200	0.60	1.40	2.40		3.0	3.6	4.2	4.8	7.2
	9.6								
250	0.75	1.75	3.00						
300	0.90	2.10	3.60	4.5	5.4	6.3	7.2	10.8	14.4
350	1.05	2.45	4.20						
400	1.20	2.80	4.80	6.0	7.2	8.4	9.6	14.4	19.2

Minimum Test Time for Various Pipe Sizes

Nominal Pipe Size (Inches)	T (time) (Min/100 ft.)	Nominal Pipe Size (Inches)	T (time) (Min/100 ft.)
3	0.2	21	3.0
4	0.3	24	3.6
6	0.7	27	4.2
8	1.2	30	4.8
10	1.5	33	5.4
12	1.8	36	6.0
15	2.1	39	6.6
18	2.4	42	7.3

Note: ASTM Low-Pressure Air Testing Method for Concrete (C-924-84) and Vitrified Clay Pipe (C-828-8)

SECTION 6

HYRUM CITY
GENERAL REQUIREMENTS
AND
SPECIFICATIONS
FOR
POTABLE WATER MAINS,
SERVICE LINES
AND
SECONDARY PRESSURE
IRRIGATION
INSTALLATIONS

6.1 DESIGN CRITERIA:

6.1.1 DESIGN REGULATIONS:

A. All water system improvements or extensions shall comply with the design and operation rules prepared by the State of Utah, Division of Drinking Water, Department of Environmental Quality and the City Standards. If there is a conflict between Standards; the most stringent shall rule.

B. A pipe network analysis shall be required for developments consisting of 50 equivalent residential lots or more that will indicate the water consumption anticipated and the pressures at each intersection of main lines.

C. Construction of the project shall not begin until complete plans and any modifications to these specifications have been approved, in writing, by the City.

D. No new drinking water facility shall be put into operation until approval to do so has been given in writing by the City.

E. Plans shall be stamped, signed and dated by a professional engineer, registered in the State of Utah, who has experience in designing public drinking water projects and who will be responsible for the design.

6.1.2 SERVICE LINES:

Service lines connected to the public water system shall meet the following criteria:

A. Service lines shall be installed by a General Utility Contractor licensed and bonded in Utah.

B. Service lines will be Type K Copper or other material approved by the City.

C. Service lines shall have a nominal inside diameter of not less than (3/4") three quarter inch nor greater than 1 inch, unless approved by the City.

D. Each dwelling unit shall be served by an individual service line. Multi-family dwelling units may be served otherwise where approved by the City to be master metered.

E. Service lines shall not be located under driveways.

F. Maintenance of the line from the home to the meter shall be the responsibility of the property owner.

6.1.3 DESIGN PERIOD:

The water system shall be designed to serve the ultimate service area and shall be based on the best information available, including area master plans, current zoning regulations and approved planned and zoning reports when available.

6.1.4 DESIGN CAPACITY:

A. General Requirements: The distribution system shall be designed to insure that a minimum of 20 psi exists at all points within the system during peak day demands in conjunction with fire flow demands.

B. Indoor Use-Assumed Peak Instantaneous Demand: The peak instantaneous demand to be assumed for indoor use shall be $Q = 10.8\ N^{0.64}$, where N equals the total number of equivalent residential connections (ERC) and Q equals the total flow in gallons per minute (gpm) delivered to these connections.

C. Outdoor Use, Peak Instantaneous Demand: The peak instantaneous and peak day demands for outside use shall be determined by multiplying the irrigated acreage by 7.92 (gpm) and 3.46 (gpm) for each acre irrigated.

D. Fire Flow: The Design Engineer shall consult with the local fire suppression authority regarding needed fire flows in the area. Generally, fire flows shall be as required by Table A-111-A-1 of the 1997 Uniform Fire Code. According to this table, minimum fire flow for a one or two family dwelling, not exceeding 3,600 square feet, is 1000 gpm. Required fire flows for other types of buildings are higher.

6.1.5 WATER MAIN SIZE:

All public water mains shall be 8 inches in diameter or larger provided that the instantaneous peak flows meet the requirement of paragraph 6.1.4. Dead end lines with fire hydrants shall be 8 inches in diameter to provide the required fire flows. Larger mains may be required to meet fire flow demand or to provide adequate service to adjacent areas.

6.1.6 WATER MAIN DEPTHS:

Water lines shall be installed to a minimum depth of five feet to the top of the pipe.

6.1.7 FIRE HYDRANTS:

Fire hydrants shall be installed in accordance with the regulations of the Fire Department

and these standards. Hydrants shall be placed in the system not over five hundred feet apart. The maximum distance from any point on street or road frontage shall not exceed 250 feet. Hydrants are to be placed at each end of the block and one in the middle of the block.

6.1.8 VALVES:

Valves shall be placed in the system so that sections of the pipe no longer than six hundred feet may be isolated and shut off from the rest of the system so repair may be made with a minimal amount of water connections put out of service. When connecting to existing or new lines at tees, a minimum of three valves shall be installed. Where crosses are used, a minimum of four valves shall be used.

6.2 MATERIAL REQUIREMENTS:

6.2.1 GENERAL:

Unless specifically designated otherwise in each case, all materials and equipments furnished for permanent installation in the work shall conform to applicable standard specifications and shall be new, unused and undamaged when installed or otherwise incorporated in the work. No material or equipment shall be used by the Contractor for any purpose other than that intended or specified. All materials not conforming to these specifications shall be specifically approved in writing by the City prior to delivery to the jobsite. Any material or equipment found not conforming with City Standards and Specifications is subject to rejection.

6.2.2 PIPE FOR WATER MAINS:

6.2.2.1 GENERAL:

These specifications cover the pipe and fittings normally used for water distribution systems.
Special considerations will be covered in the Approved Plans and Special Conditions.

6.2.2.2 PIPE:

A. Ductile Iron Fittings and Rubber Gasket Joints: All joints under this specification shall be short body cast iron fittings conforming to ANSI/AWWA C110 or Ductile Iron Compact MJ fittings conforming to ANSI/AWWA C153 Class 350.

B. Ductile Iron Pipe: Ductile Iron Pipe shall be of Pressure Class 350 thru 12”

diameter meeting the requirements of AWWA C151. Pipe and fittings shall be manufactured in the United States of America.

C. Polyvinyl Chloride Plastic Water Pipe: All PVC pressure pipe for culinary water service shall conform to AWWA C900 (4”-12”) or AWWA C905 (14” and larger) Pressure Class 235 (DR18). All PVC pressure pipe for secondary water shall conform to AWWA C900 (4”-12”) or AWWA C905 (14” and larger) Pressure Class 235 (DR18) and shall be purple in color to make it suitable for use with reclaimed water.

All rigid PVC pipe used for potable water service shall bear the seal of approval of the National Sanitation Foundation Testing Laboratory, Inc., which has qualified the pipe for potable water service.

Pipe shall be produced in standard and random lengths. At least 85% of the total footage of any class and size shall be furnished in standard lengths. The remaining 15% may be in random lengths.

1. Standard lying lengths shall be 20 feet plus or minus one inch for all sizes.
2. Random lengths shall not be less than 10 feet long.

Each standard and random length of pipe shall be marked on the outside surface with the trade name with the appropriate designation code (e.g. PVC 1120), DR, nominal size, pressure classification and date of manufacture.

Samples of pipe, physical and chemical data sheets, may be required to be submitted to the Engineer for approval and approval may be required before the pipe is purchased.

The pipe shall be homogeneous throughout and free from cracks, holes, foreign inclusions or other defects. The pipe shall be as uniform in color as commercially practical.

The rigid PVC pipe used in the municipal water distribution system shall be composed of PVC compounds meeting the requirements of ASTM D1784.

6.2.3 VALVES FOR WATER MAINS:

A. Description: The valves shall be suitable for an ordinary waterworks service intended to be installed in a normal position on buried pipe lines for water distribution systems. All valves shall be Mueller, or equal, with non-rising stem valves.

The minimum requirements for all gate valves shall, in design, material and workmanship, conform to the standards of AWWA C509 for Resilient-Sealed Gate Valves. All materials used in the manufacture of waterworks gate valves shall conform to the AWWA Standards designed for each material listed. All gate valve operating stems shall be equipped with a two (2) inch operating nut. All gate valves shall open counterclockwise.

The minimum requirements for all butterfly valves shall, in design, material and workmanship conform to the standards of the AWWA C504. Any water valve 12 inches or larger shall be butterfly-type. Also, any water line with working pressure greater than 150 psi shall have only butterfly-type valves installed.

Where static line pressure exceeds 125 psi, only 250 psi working-pressure valves shall be used.

B. Materials:

1. Manufacture and Marking: The valves shall have the name or mark of the manufacturer, year valve casting was made, size and working pressure plainly cast in raised letters on the valve body.

2. Type and Mounting: The valve bodies shall be ductile iron, mounted with approved non-corrosive metals, All wearing surfaces shall be bronze or other approved non-corrosive material. Contact surfaces shall be machined and finished in the best workmanlike manner, and all wearing surfaces shall be easily renewable.

3. Valve Seats: Resilient seats shall be applied to the gate and shall seat against a corrosion-resistant surface. The surface may be either metallic or non-metallic, applied in a manner to withstand the action of line fluids and the operation of the sealing gate under long-term service. A metallic surface shall have a corrosion resistance equivalent to or better then bronze. A non-metallic surface shall be in compliance with ANSI/AWWA C550. Resilient seats shall be bonded or mechanically attached to the gate. The method used for bonding or vulcanizing shall be proved by ASTM D429; either method A or method B. For method A, the minimum strength shall not be less than 250 psi (1,725 kPa). For method B, the peel strength shall not be less than 75 lb/in. (9.3 kg/m).

   All exposed mechanical attaching devices and hardware used to retain the resilient seat shall be made of a corrosion-resistant material.

4. End Connections: The dimensions push-on end connections shall conform to the dimensions of the AWWA Standard C111/A21.11. The dimensions

for the mechanical joint connections shall conform to the ANSI/AWWA C111/A21.11.

The end flanges of flanged valves shall conform in dimensions and drilling to the standard ANSI B16.1 for ductile iron flanges and flanged fittings, Class 125, unless specifically provided otherwise. The bolt holes shall straddle the vertical center line.

5. Gate Valve Stem Seals: Unless otherwise designated in the Approved Plans, all gate valves up to and including 12-inch in size shall be furnished with O-ring Stem Seals. Number, size and design shall conform to the AWWA Standards for gate valve O-Ring Stem Seals. For all valves over 12", the stem seals shall be conventional type stuffing-box with graphite packing per AWWA Standard No. C600-18.1.

6. Tapping Valves: Tapping valves shall be furnished with flanged inlet end connections having a machined projection on the flanges to mate with a machined recess on the outlet flanges of the tapping sleeves and crosses. The outlet ends shall conform in dimensions to the AWWA Standards for hub or mechanical joint connections, except that the outside of the hub shall have a large flange for attaching a drilling machine. The seat opening of the valves shall be larger than normal size to permit full diameter cuts.

7. Hydrostatic Test Pressure of Valves at Factory: Each gate valve shall be tested at the factory for performance and operation prior to painting in conformance with Section 6 of AWWA Standard C509.

8. Installation of Gate Valves: All gate valves shall be inspected upon delivery in the field to insure proper working order before installation. They shall be set and jointed to the pipe in the manner as set forth in the AWWA Standards for the type of connection ends furnished. The valves shall also be carefully inspected for injury to the outer protective coatings. Valves 12-inch and under shall be installed in a vertical position and be provided with a standard valve chamber or ductile iron gate box so arranged that no shock will be transmitted to the valve. The box shall be centered over the operating nut, and the cast iron box cover shall be set one-half (1/2) inch below the roadbed or finished paved surface. All valve boxes must be brought to this elevation prior to the placement of asphalt, unless otherwise approved by City Engineer.
After installation, all valves shall be subjected to the field test for piping as outlined in Section 6.8 of these specifications. Should any defects in design, materials or workmanship appear during these tests, the Contractor

shall correct such defects with the least possible delay and to the satisfaction of the Engineer. Should the Contractor fail to do this within a reasonable period of time in the judgement of the Engineer, he may cause such defects to be corrected and take appropriate action to receive payment for the work.

9. Butterfly Valves: Butterfly valves shall be cast iron or ductile iron body, rubber seated, tight closing type butterfly valves conforming to AWWA Specification C504. Other types may be used if specified or approved by the Engineer.

   Valves shall be fitted with Class 125 or Class 250 flanges conforming to ASME/ANSI B16-1 or ANSI/AWWA C110/A21.10.

   The valve body shall be high strength cast iron ASTM A126 Class B with 18-8 Type 304 stainless steel body seat. Valve vane shall be high strength cast iron ASTM A48 Class 40, having rubber seat mechanically secure with an integral 18-8 stainless steel clamp ring and 18-8 stainless steel nylon locked screws.

   Rubber seat shall be a full circle 360 ☐ seat not penetra
   shaft. Valve shaft shall be one piece, extending full size through the entire valve and operator with no neckdown, keyways or holes to weaken it. Valve shaft shall have 304 stainless steel journals rotating in reinforced teflon bearing. Packing shall be “triple-seal” rubber designed for permanent duty in underground service.

   Certification of performance, leakage and hydrostatic tests as described in Section 5 of AWWA Specification C504 shall be furnished. Valves shall be the product of a manufacturer having a minimum of five years experience in the manufacture of waterworks and distribution valves. Butterfly valves shall be as manufactured by Henry Pratt, Dresser or approved equal.

10. Ball Valves: Ball valves shall conform to ANSI/AWWA C507 Standard for Ball Valves 6-inch through 48-inch.

11. Check Valves: Check valves shall be of the Lever-Weight Type, conventional flanged style as manufactured by Mueller Company, or approved equal, conforming to ANSI/AWWA C508 Standard for check valves 2-inch through 48-inch.

    The plug, which shall be guided at both ends with a through integral shaft,

will be opened by the flow velocity and closed by a lever and weight which can be adjusted to any position on the lever and which returns the plug to the seat before reversal of flow occurs.

All check valves shall have a maintenance pit of a size as approved by the City Engineer to provide access.

12. Air Relief/Vacuum Relief Valves: Air Relief Valves shall be CLA valves or equal of the type and model shown on the Approved Plans or as specified in the Contract Documents.

13. Valve Boxes and Covers: All valves not in a vault as per the attached Standard Drawing shall be provided with a cast iron valve box of the extension sleeve type, and the correct adjustable height to bring the top of the valve box flush with the finished surface. The valve box shall not be less than 5 inches in diameter, and shall have a minimum thickness of 3/16 inch, and shall be provided with suitable base and cover for culinary water valves. The word "Water" shall be cast on the cover. For secondary water, a triangular lid bearing the word "irrigation" shall be used. Valve boxes shall be equal to Mueller H-10357 with No. 6 or No. 8 round base as needed. There shall also be furnished to the City Water Department, 1 "T" handle operating wrench for each 5 new valves installed on the project.

6.3 WATER SERVICE CONNECTIONS AND FIRE LINES:

6.3.1 GENERAL:

Service connections will be made by the Contractor, in accordance with these Specifications and Standard Drawings. This includes furnishing and installing service connection at the main, service line, yoke and box. The City will furnish and install the meter. All connections to the Hyrum water system including fire lines shall be metered unless otherwise approved by the City. In the case of connections serving only a fire system, the cost of the meter vault and appurtenances shall be borne by the developer while the meter shall be provided at no additional cost by Hyrum City. All service connections including fire lines shall be constructed in accordance with the provisions of this section up to the first shut-off valve within the building. Service connections will be activated only after inspection, testing, chlorination and flushing of all new water line facilities, and also only after acceptance of the main line, unless otherwise approved by Hyrum City.

Each culinary service connection must be pressure tested in accordance with Section 6.8 except that the test pressure shall not exceed 200 pounds per square inch. Each fire line

shall be pressure tested in accordance with Section 6.8 except that the test pressure shall not exceed 200 pounds per square inch.

Water service connections shall be installed in accordance with the attached applicable Standard Drawings.

6.3.2 MATERIALS:

A. Corporation Stops: Corporation Stops will be brass with ball type or Mueller Oriseal type (1-1/2" and 2" sizes only) inlets and Mueller, or Ford, 110 Compression connection outlet in accordance with AWWA Standard C800.

B. Service Clamps: All service taps shall be equipped with double or single-strap stainless steel Teflon-coated service clamps.

C. Pipe Materials: All service lines will be type K, soft copper tubing, conforming to AWWA Standard C800 and ASTM B88, or HDPE, conforming to AWWA C901. Laterals shall be installed without any connections or appurtenances between the corporation stop and the meter yoke.

D. Meter Yoke: Meter yokes will be Mueller or Ford V-80 series “copper setter" of molded copper tubing with reinforcing bars and angle type dual check valve, meter fittings will be standard threads, copper tubing fittings to be copper flair in accordance with AWWA Standard C700.

E. Meter Box: Meter boxes will be 18-inch diameter for 3/4-inch meter installation, 24-inch diameter for 1-inch meter installation and 48-inch concrete diameter for 1-1/2-inch meter installation. The box will be white ABS Pipe, 36-inches in length with knock-out for touch reading. Meter box shall be located as per the approved drawings and is subject to approval by the City.

Standard length of the box will be 48 inches unless otherwise approved. Prior approval by the City is required in these cases.

F. Meter Box Lid: Meter box lids will be of cast iron or cast aluminum. The lid shall be secured with standard nut. All meter lids must have a 2-inch hole for remote reading and be approved by the City.

G. Curb Stop and Curb Box: Mueller Oriseal curb valve and cast iron extension-type curb box with arch pattern base with cast iron foot piece as manufactured by Mueller. Prior approval by City required for substitution.

H. Meters: Meters shall be supplied by the City but paid for by the Developer.

6.3.3 CONSTRUCTION:

Taps shall be made and service pipe installed at a right angle to the water main. The tap shall be made on the middle of the main at an angle between 45 degrees and 60 degrees from the vertical plane, on the side of the main to which service is to be extended.

The water main shall be tapped by machine drilling a hole in it the size to fit the corporation for the service line. The drilling machine and method of tapping shall be approved by the City. A representative of the City shall inspect the main and tap prior to backfilling. In the event the tap is covered before it is inspected, it shall be uncovered by the Contractor to allow for inspection. If the tap or water main is damaged during the process of locating, it shall be repaired immediately by the Contractor in a manner acceptable to the City.

The service line shall be constructed as near as possible in the center of the lot and on the shortest and straightest route possible. No service line may be constructed through, or in front of any adjoining property.

All service lines installed across and under existing roads that are paved shall be installed by boring or pulling the pipe. No open cuts will be permitted.

If the line is not to be connected initially to a meter yoke, the end of the service line shall then be sealed shut to keep rocks and dirt out of the line. Every precaution shall be taken to prevent foreign material, including trench water from entering the pipe.

Where existing services are to be transferred from old to new mains, the Contractor shall plan and coordinate his work with that of the City so that service will be resumed with the least possible inconvenience to consumers.

Whenever the Contractor is required by the Approved Plans and Special Conditions to remove an existing water main, the Special Conditions will state whether or not the salvage of pipe, valves, hydrants and fittings will be required and the method of payment therefore.
All meter installations will be located (9) nine feet from the property line in front of the building and shall not occur in a sidewalk or driveway. If it is impossible to construct the meter box at this location, approval to relocate must first be secured from the City.

All meter installations will be installed so that the meter box lid is at grade with a tolerance of +1/2".

All irrigation sprinkling systems will be connected no closer than 2 feet from the meter

box on the customer side of the meter.

The Contractor shall not in any case remove old pipe until all service connections have been transferred to the new main. Adequate provisions shall be made by the Contractor during construction for the care and protection of mains or services in use.

Where salvage of pipe, valves, hydrants and fittings is required under the contract, salvage methods shall be used which will save all materials intact and undamaged. Salvaged material shall be stored at the City's yard, unless otherwise provided.

If salvage is not specified, the materials thereof shall become the property of the Contractor and shall be promptly removed from the site for disposal as he sees fit.

To supply customers with water during the construction of a water main project where any section of the pipe has passed a satisfactory hydrostatic and bacteriological test, the City reserves the right to install a corporation stop into the section of a new main and install service connections at such locations as the City may elect, at no expense to the Contractor. The attaching of any such service connections by the City shall not be construed by the Contractor as an acceptance by the City for any part of the work required under the Contract.

6.4 FIRE HYDRANTS:

6.4.1 GENERAL:

These Specifications are to be used in conjunction with the AWWA Standard C502 or the latest revision thereof for fire hydrants for ordinary water works service.

6.4.2 MATERIALS:

A. Material for Hydrants and Appurtenances: All materials used in the production of fire hydrants for ordinary service shall conform to the specifications designated for each material listed in AWWA Standard C502.

B. Hydrant Size and Type: Hydrants shall be 5-inch minimum size with 2-1/2 inch hose nozzles and 1 - 4-1/2 inch pumper nozzle. Hydrants shall be supplied with O-Ring seals and a 6-inch ASA 125 pound flanged inlet. Each hydrant shall be supplied complete with a flanged mechanical joint auxiliary gate valve with box. They shall be Mueller Super Centurion A-423 or Clow. A hydrant key shall be provided to the Public Works Department for each five hydrants installed.

C. Auxiliary Valve: Per Section 6.2.3 of these Specifications.

D. End Connections: The dimensions of hub or bell end connections shall conform to the dimensions of the AWWA Standard No. 100. The dimensions of the mechanical joint connection shall conform to the USASI Specification No. A21.11.

The flanged lateral connection shall be faced and drilled to conform to the American Standard for 125-lb. W. P. flanged fittings when static pressures do not exceed 125 pounds. 250 pounds working pressure, flanged fittings shall be used when working pressure is greater than 125 pounds. Flanges shall be machine finished to a true surface. Bolt holes shall straddle the vertical center line.

E. Sidewalk Flange Construction: Hydrants shall be provided with a sidewalk flange. Breaking devices shall be at the sidewalk flange which will allow the hydrant barrel to separate at this point with a minimum breakage of hydrant parts in case of damage. There shall also be provided at this point a safety stem coupling on the operating stem that will shear at the time of impact. Unless otherwise specified, all hydrants shall be equipped with O-Ring stem seals.

F. Factory Hydrostatic Test: All hydrants installed shall have certification of being subjected to an internal hydrostatic test of 300 pounds per square inch with the hydrant valve in a closed position and again with the hydrant valve in an open position upon request by the City Engineer.

6.4.3 CONSTRUCTION DETAILS:

A. Setting Hydrants: Hydrants shall be installed in accordance with the detail shown on the enclosed drawing in the location specified in the Approved Plans or as designated by the City. All hydrants shall be inspected in the field upon arrival to ensure proper working order. After installation, they shall be subjected to a hydrostatic test not to exceed the factory test pressure. New hydrants are to be marked by a red-painted snow stake approved by the City. Hydrants shall not be operated for the purpose of obtaining water for normal construction purposes. Any hydrant so operated shall be replaced by the Contractor.

B. Hydrant Connections: Hydrant laterals shall consist of a section of mechanical joint ductile iron 6-inch pipe restrained from the main to the hydrant and shall include an auxiliary gate valve set vertically and placed in the line as indicated in the Standard Drawings for hydrant settings.

C. Relocating Existing Hydrants: When shown on the Approved Plans or when directed by the City, existing hydrants shall be moved. When the existing tee is moved to a new hydrant location, a new tee shall be inserted and the open part of the abandoned tee shall be securely sealed and blocked. When the existing

hydrants are blocked to the main line, the same method shall be used to anchor the hydrants at their new locations. The work shall conform in all respects to hydrant settings as described elsewhere in these Specifications.

D. Hydrant Extensions: The minimum requirements for all flanged hydrant barrel extensions, operating stems and flanged adaptors for hydrant lateral connections shall, in design, material and workmanship, conform to the AWWA Standards for such castings. The drilling of the flanges on the extensions shall match the drilling of the flanges on the hydrant. The drilling of the adaptor flanges shall match those of the hydrant foot flange and the auxiliary gate valve flange.

E. Testing of Fire Hydrants: Fire hydrants shall be subjected to a hydrostatic test at a minimum of 150% of the working pressure of the supply main but not to exceed 200 pounds per square inch for a period of two hours, after being connected to the main water line and after concrete anchor blocks at all thrust points are in place. Testing shall be made with the whole interior of the hydrant under pressure with the auxiliary valve and the foot valve open and the hose nozzles and pumper connections closed. Under the test procedure, there shall be no leakage through the main valve or stuffing box, nor through the castings or the joints of the assembled hydrant. Under the test conditions, the leakage through the drain valve shall not exceed four fluid ounces per minute. Other leakage or other imperfections found in either test shall be corrected before the hydrant is accepted. At the option of the Contractor, he may test each fire hydrant separately or he may choose to test fire hydrants along with the water line hydrostatic pressure test.

6.5 WATER MAIN AND SERVICE LINE CONSTRUCTION:

6.5.1 GENERAL:

All water mains and service line construction within the Hyrum City water system or intended to be connected to the Hyrum City water system shall be accomplished in accordance with the requirements of these Specifications. In all cases construction must conform to Utah's Drinking Water Regulations. All water lines, connections, and appurtenances on the customer's side of the meter or beyond a point five feet beyond the edge of the nearest all-weather roadway, whichever creates the greater distance, of private line shall be privately maintained. No public water mains shall be accepted by the City until there is sufficient usage through the line to prevent wintertime freezing. No landscape irrigation line shall be connected to the City system without a backflow preventer similar to attached drawings.

6.5.2 APPROVED PLANS:

Water main construction shall be done in accordance with the Contract Documents for

the work, prepared under the direction of a Professional Engineer licensed in Utah and approved by the City Engineer and Hyrum City.

6.5.3 LICENSES AND PERMITS REQUIRED:

A. All water mains and service line construction shall be done by a General Utility Contractor licensed and bonded in Utah.

B. When construction is required within the public right-of-way, a permit shall be secured by the Contractor from Hyrum City at least 48 hours before initiating construction. When construction necessitates, shutting down a segment of public water main for a connection, the connection shall be made between the hours of 2:00 a.m. and 7:00 a.m. local time unless otherwise approved by the City.

C. A cash bond shall be posted to guarantee the work for a period of two years.

D. An indemnity bond shall also be posted to guarantee that work will conform to the City's Standard Specifications and to guarantee that Hyrum City will not be liable for any accidents, property damage or physical damage to any individual related to acts of the Contractor.

E. The City shall be notified 48 hours minimum before the planned construction is to commence and also before starting up Whenever construction is interrupted for any reason.

F. A plumbing permit is required from the City prior to connecting landscape irrigation lines to the City water system.

6.5.4 INSPECTION:

All work shall be inspected by a City authorized Inspector who shall have the authority to halt construction when, in his opinion, construction is being performed contrary to the Contract Documents. Whenever any portion of these Specifications is violated, the City Administrator, by written notice, may order that portion of construction which is in violation of the Contract Documents to cease until such violation is corrected. A copy of the order shall be filed with the Contractor's license application for future review. If deficiencies are not corrected, performance shall be required of the Contractor's Surety.

6.6 TRENCH EXCAVATION AND BACKFILL FOR WATER MAINS:

6.6.1 GENERAL:

The Specifications in this section, and those of sections 6.2.2 through 6.2.6, shall apply to

the construction of water distribution mains and appurtenances in sizes up to and including twenty-four inches (24") in diameter for both temporary and permanent installation under ordinary conditions.

Water mains will be constructed on locations as shown on the Approved Plans.

Where grading is required, rough grading or excavation and embankment shall be completed before excavation of the water main trench.

Guarantee: Unless otherwise provided by the Special Conditions, the Contractor shall guarantee that the design, materials, workmanship and performance of the pipe, valves, hydrants, valve chambers, boxes, fittings and accessories furnished by him will be as specified, and that they and the installation of them will be satisfactory to the Owner for the purpose intended for a period of two years after final acceptance of the installation.

6.6.2 UNGRADED STREETS:

On streets, when grading is not provided in the contract schedule, the depth of trench excavation shall be as shown on the Approved Plan and Profile and as staked by the Engineer.

Where the Approved Plans show the pipe is to be laid above the existing ground surface, an embankment fill shall be made and compacted to conform with the section shown on the Approved Plans and the water main trench shall be excavated therein. That portion of the embankment below the bottom of the pipe shall be compacted with rollers or mechanical compactors under controlled moisture conditions.

6.6.3 CLEARING AND GRUBBING IN UNGRADED STREETS:

The area to be excavated or filled shall be cleared and grubbed by the Contractor. This work shall consist of the removal and disposal of all logs, stumps, roots, brush and other refuse. All such material shall be removed and disposed of as directed by the City.

6.6.4 REMOVAL AND REPLACEMENT OF PAVEMENT FROM DRIVEWAYS AND SIDEWALKS:

Removal and replacement of existing street improvements shall be performed as specified in the City's standards and shall be considered as incidental to the construction and the costs shall be included in the installation of the water line.

The removal of material from pavement, driveway and sidewalk and the disposal thereof shall be considered as incidental to the construction.

6.6.5 GRADE AND ALIGNMENT:

Grade and alignment on ungraded streets will be given from hubs set parallel to the line of the pipe, and on graded streets the grade and alignment shall be taken from established points on the existing curbs or sidewalks, when directed by the Engineer. Trenches for the pipe shall be opened in accordance with the lines and grades given or to the standard minimum cover of five (5) feet, depending on elevation and future surface treatment, whichever is greater. The Contractor shall transfer lines and grades to the pipe from hubs set by the Engineer or from existing concrete curbs or sidewalks as an incidental part of his work.

Sequence of operations, traffic requirements, or restrictions on the amount of open trench, if any, will be provided in the Special Conditions.

6.6.6 TRENCH EXCAVATION:

The Contractor shall perform all excavation of every description and of whatsoever substances encountered to the depth indicated on the Standard Drawings or specified herein. All excavations shall be made by open cut unless otherwise provided in the Contract Documents. The banks of the trenches shall be kept in accordance with Utah Occupational Health and Safety Division (UOSHA) requirements. To protect adjacent structures the trench shall be properly sheeted and braced.

Work shall comply with the "Utah Occupational Safety and Health Rules and Regulations" for the Utah State Industrial Commission.

All grading and other excavations nearby shall be controlled to prevent surface water from flowing into the excavations. During excavation, material suitable for backfilling shall be piled in an orderly manner a sufficient distance away from the edges of trenches to avoid overloading and to prevent slides or cave-ins. Unsuitable material, or that in excess to the needs for embankments or backfill, shall be removed and disposed of by the Contractor.

The Contractor shall exercise sound engineering and construction practices in excavating the trench and maintaining it so that no damage will occur to any foundation, structure, pole line, pipe line, or other facilities because of slough, slopes, or from any other cause. If, as a result of the excavation, there is disturbance of the ground such as to endanger other property, the Contractor shall immediately take remedial action at his own expense. No act, representation or instruction of the Engineer or his representatives shall in any way relieve the Contractor from liability for damages or costs that result from trench excavation.

Care shall be taken not to excavate below the depth indicated, and excavation below that

depth shall be backfilled with selected backfill material and compacted to the satisfaction of the City Engineer at the Contractor's expense.

The bottom of trenches shall be accurately graded to provide uniform bearing and support for each length of pipe or undisturbed or compacted soil at every point along its entire length, except at the joints. Bell holes shall be excavated to an extent sufficient to relieve bearing pressure at the bell joint.

6.6.7 PROTECTING EXISTING SERVICES:

The Contractor shall carefully do all necessary excavation to fully expose such services. If the Contractor elects to excavate the trench without first exposing the services, he shall be responsible for any and all damages incurred to the services by reason of his operations and shall immediately arrange for replacement of all damaged services. All additional costs incident to such work by the Contractor shall be considered as incidental to the construction.

6.6.8 SOLID ROCK EXCAVATION:

Solid rock shall include solid rock formations requiring systematic drilling and blasting with explosives and any boulders or broken rock larger than one-half cubic yard in volume. Hardpan or cemented gravel, even though it may be advantageous to use explosives in its removal, shall not be classified as solid rock excavation. Solid rock shall be excavated to a width equal to the outside barrel diameter of the pipe plus 24 inches, and to a grade line not less than six inches below bottom of the pipe bell. Bottom of the trench shall be brought up to grade by backfilling with selected backfill material. The material shall be compacted to the satisfaction of the Engineer.

The Contractor shall notify the City and the local Police Department at least 24 hours prior to any blasting. All blasting shall be done in accordance with local, county and state regulations governing this class of work. Any damage to persons or property resulting from blasting operations shall be the sole responsibility of the Contractor and his surety.

6.6.9 EXTRA EXCAVATION:

Changes in grades of the water main from those shown in the Contract Documents may be necessary because of un-plotted utilities, or for other reasons. If, in the opinion of the Engineer, it is necessary to adjust, correct, relocate or in any way change the line and grade, such changes shall be made by the Contractor under the terms of these Specifications.

6.6.10 UNFORESEEN BURIED OBJECTS ENCOUNTERED IN TRENCH EXCAVATION ON GRADED STREETS:

Where streets have been graded, it is presumed that stumps, railroad ties, buried pavements, etc., will have been removed in the original grading work. Where such unexpected objects are encountered in trench excavation for water mains, they shall be removed and disposed of by the Contractor. In cases where they can be removed by the same equipment or method at hand for excavating, and where it is unnecessary to employ special equipment or to install shoring and bracing, or to increase the trench width or depth more than two feet for any one object, then in that event the removal of such obstructions shall be considered as an incidental part of the Contractor's work.

6.6.11 REMOVAL OF UNSUITABLE MATERIALS:

Wherever in excavating the trench for water mains the bottom of the trench exposes peat, soft clay, quicksand or other material which is unsuitable in the opinion of the City Engineer, such material shall be removed and disposed of by the Contractor. The material thus removed shall be replaced by suitable surplus material obtained from trench excavation within the limits of the project which shall be deposited and compacted in eight-inch layers by mechanical compaction. If surplus material is not available within the limits of the project the Contractor shall furnish suitable material.

6.6.12 PIPE BEDDING:

Pipe bedding material shall consist of road base or graded granular sand and gravel of which 100% will pass the U.S. Standard one-inch opening and not more than 3% will pass the U.S. No. 200 (wet sieve). Pea gravel or similar gravel products predominantly of one size shall not be used without prior approval of City Engineer. Bedding material will be placed in accordance with the attached Standard Drawing.

Under no circumstances shall mine tailings containing traces of arsenic, lead, strontium, rubidium, or radium be used as bedding material.

6.6.13 BACKFILLING TRENCHES:

PVC Pipe: Backfilling of trenches within the pipe zone (typically from bedding to 12” above the top of pipe) shall be accomplished with 3/4” minus backfill meeting the requirements of the Utah Division of Drinking Water. Backfill above the pipe zone shall be accomplished with the same materials excavated from the trenches unless these materials are found to be unsuitable by the Engineer.

Ductile Iron Pipe: Backfilling of trenches within the pipe zone (typically from bedding to 12” above the top of pipe) shall be accomplished with 1-1/2” minus material meeting the

requirements of the Utah Division of Drinking Water. Backfill above the pipe zone shall be accomplished with the same materials excavated from the trenches unless these materials are found to be unsuitable by the Engineer.

Prior to backfilling, all form lumber and debris shall be removed from the trench. Sheeting used by the Contractor shall be removed just ahead of the backfilling unless it is ordered by the Engineer to be left in place.

The initial backfill up to 12 inches over the top and both sides of the pipe shall be evenly and carefully placed, using sand or material free of rocks larger than ¾" for PVC and 1-1/2" for DIP, hard clods, frozen material or other debris capable of damaging the pipe or its coating. The balance of the material may be placed in uniform layers.

A minimum of 4-inch sand cushion shall be placed between the water main and existing pipelines or other conduits when encountered during construction and as directed by the Engineer.

6.6.14 COMPACTION OF BACKFILL:

On graded streets without pavement or on roadway shoulders and unimproved areas, compaction of backfill may be by mechanical tamping or wheel rolling. Compaction by water settling may be done under the conditions stipulated in the following Section A.

On all graded streets, the backfill shall be compacted to 95% of the maximum density as determined by the Compaction Control Tests specified in AASHT0 T-180 and verified by the methods specified in ASTM D2922 (AASHTO T-238) or ASTM D1556 (AASHTO T-191). The compaction can be reduced to 90% for areas where vehicle traffic will never occur.

A. Water Settling of Trenches: Water settling is only allowed in sandy soil conditions where no clays are present and in other soil conditions under full time inspection by a City Inspector. Where water settling of trenches is used, the jetting method shall be utilized. Jets shall be inserted throughout the length of the backfilled area and shall be slowly forced down to the bottom of the trench and then slowly withdrawn until the trench backfill is saturated with water. The jetting operations shall be completed as close behind the pipe laying and backfilling as practicable.

After the water-settled trench has set for several days, any depression in the trench shall be filled and mounded up over the trench, and then further compacted by the use of heavy rubber-wheeled equipment or equivalent as approved by City Engineer.

B. Equipment for Water Settling Trenches: The Contractor shall furnish all hose and equipment necessary for jetting operations. The minimum size of hose and equipment shall be such as to provide not less than thirty-five (35) pounds per square inch pressure at the discharge. The jet shall be a rigid iron pipe with a minimum diameter of one (1) inch.

C. Source of Water for Water Settling: Source of water will depend upon local conditions and shall be as provided in the Special Conditions. Where no provision for water is made in the Special Conditions, the Contractor shall make his own arrangements for it.

D. Compaction of Backfill under Special Conditions: At locations where paved streets, driveways or sidewalks will be constructed or reconstructed over the trench, or where provided for in the Special Conditions or directed by the Engineer, the backfill shall be spread in layers and be compacted by mechanical tampers. In such cases the backfill material shall be placed in successive layers, not exceeding eight (8) inches in loose thickness and each layer shall be compacted with mechanical tampers to the density directed by the Engineer.

6.6.15 GRAVEL BASE COURSE FOR TRENCH BACKFILL:

Selected backfill material above the pipe zone shall consist of gravel base course with 100% of the material passing the 1-1/2" square opening.

6.6.16 BORING:

Water lines and service lines installed across and under existing pavement shall be bored or pulled unless authorized by the City to install by open trenching.

6.7 PIPE INSTALLATION FOR WATER MAINS:

6.7.1 GENERAL:

Pipe shall be installed in accordance with the manufacturer's specifications and instructions for installing the type of pipe used unless modified or changed in the Special Conditions. The Contractor shall provide all tools and equipment including any special tools designed for installing each particular type of pipe used.

6.7.2 CONSTRUCTION:

A. Dewatering of Trench: Where water is encountered in the trench, it shall be

removed during pipe-laying operations and the trench so maintained until the ends of the pipe are sealed and provisions are made to prevent floating of the pipe. Trench water shall not be allowed to enter the pipe at any time.

B. Handling of Pipe: All types of pipe shall be handled in such manner as will prevent damage to the pipe, pipe lining or coating. Damage to pipe, pipe lining or coating shall be repaired to the satisfaction of the Engineer or the damaged pipe shall be removed from the job and methods of handling corrected to prevent further damage.

Threaded pipe ends shall be protected by couplings or other means until laid.

The pipe and fittings shall be inspected for defects and cast iron pipe, while suspended above grade, shall be rung with a light hammer to detect cracks.

Dirt or other foreign material shall be prevented from entering the pipe or pipe joint during handling or laying operations and any pipe or fitting that has been installed with dirt or foreign material in it shall be removed, cleaned and relaid. At times when pipe laying is not in progress, the open ends of the pipe shall be closed by a watertight plug or by other effective seal approved by the City Engineer to ensure absolute cleanliness inside the pipe.

C. Laying of Pipe on Curves: Long radius curves, either horizontal or vertical, may be laid with standard pipe by deflections at the joints. If the pipe is shown curved on the Approved Plans and no special fittings are shown, the Contractor cannot assume that the curves can be made by deflection of the joints with the standard lengths of pipe. The Contractor is responsible for verifying the maximum degree of curvature allowed according to AWWA for the type and size of pipe he is installing. If shorter lengths are required, the Approved Plans shall indicate maximum lengths that can be used.

Maximum deflections at pipe joints and laying radius for various pipe lengths are as found in the following standards:

Ductile Iron Pipe Mechanical Joints	AWWA C600, Table 6
Ductile Iron Pipe Push-On Joints	AWWA C600, Table 5
Concrete Cylinder Pipe	AWWA C303, Section 4.3
Steel Pipe O-Ring Joints	See Manufacturer's Recommendations
Steel Pipe Welded Joints	See latest AWWA Specifications
PVC	AWWA C900

When rubber gasketed pipe is laid on a curve, the pipe shall be jointed in a straight alignment and then deflected to the curved alignment. Trenches shall be made wider on curves for this purpose.

The City Engineer may require the Contractor to run a mandrel through each section of curved water line to verify maximum deflection.

6.7.3 LAYING DUCTILE IRON PIPE:

A. Joints for Ductile Iron Pipe: Joints for ductile iron pipe shall consist of one of the two following types unless otherwise provided in the Special Conditions:

1. Mechanical joints
2. Rubber gasket joints (Push-On)

B. All ductile iron pipe and fittings shall be encased in 8 mil polysock or sheet material installed per the manufacturers recommendations. Elimination of Polysock encasement for pipe only may be waived by the city upon request if justified based on soil conditions.

6.7.4 JOINTING MECHANICAL JOINT PIPE:

The outside diameter of the spigot end of bell-and-spigot pipe varies with the type, size and class of pipe. There is only one joint size for each diameter of mechanical joint pipe. Thus, difficulty may be met when attempts are made to connect existing bell-and-spigot pipe to mechanical joint pipe. When such a connection must be made, an adapter having a fitting bell and a mechanical joint socket shall be used.

A. Cleaning and Assembling Joint: The last 8 inches outside of the spigot and inside of the bell of mechanical joint pipe shall be thoroughly cleaned to remove oil, grit, tar (other than standard coating), and other foreign matter from the joint, and then painted with a soap solution made by dissolving one-half cup of granulated soap in one gallon of water. The ductile iron gland shall then be slipped on the spigot end of the pipe with the lip extension of the gland toward the socket or bell end. The rubber gasket shall be painted with the soap solution and placed on the spigot end with the thick edge toward the gland.

B. Bolting of Joint: The entire section of the pipe shall be pushed forward to seat the spigot end of the bell. The gasket shall then be pressed into place within the bell, being careful to have the gasket evenly located around the entire joint. The ductile iron gland shall be moved along the pipe into position for bolting, all of the nuts inserted, and the nuts screwed up tightly with the fingers. All nuts shall be tightened with a torque wrench. The torque for various sizes of bolts shall be as

follows:

Size Inch	Range of Torque Ft.-Lbs.
5/8	40 - 60
3/4	60 - 90
1	70 - 100
1-1/4	90 - 120

Nuts spaced 180 degrees apart shall be tightened alternately in order to produce an equal pressure on all parts of the gland.

6.7.5 JOINTING RUBBER GASKET JOINT PIPE:

Cleaning and Assembling Joint: The inside of the bell shall be thoroughly cleaned to remove oil, grit, tar (other than standard coating) and other foreign matter from the joint. The circular rubber gasket shall be flexed inward and inserted in the gasket seat provided in the socket and released with the gasket fitting over the bead in a gasket seat.

A thin film of gasket lubricant shall be applied to the inside surface of the gasket. Gasket lubricant shall be a solution of vegetable soap or other solution supplied by the pipe manufacturer and approved by the City Engineer.

The spigot end of the pipe shall be cleaned and entered into the rubber gasket in the socket, using care to keep the joint from contacting the ground. The joint shall then be completed by forcing the plain end to the bottom of the socket, using a forked tool or jack-type tool or other device approved by the City Engineer. Pipe which is not furnished with a depth mark shall be marked before assembly to assure that the spigot end is inserted to the full depth of the joint.

Field cut pipe lengths shall be filed or ground to resemble the spigot end of manufactured pipe.

6.7.6 LAYING PVC PIPE:

Only persons competent in the opinion of the City Engineer or Public Works Director at laying plastic pipe shall be employed on this phase of the work, and complete suitable equipment necessary for the execution of same is required. Any incompetency observed by the Engineer must be rectified at his request, and where improper equipment or lack of same appears to be impairing the quality or speed of the work, such adjustments in same shall be made to the Engineer's satisfaction.

The pipe, fittings, and valves shall be placed in the trench with care. Under no

circumstances shall pipe or other materials be dropped or dumped into the trench. The pipe shall not be dropped in a manner which would cause scratching of the pipe surface. An excessive amount of scratching of the surface of the pipe will be considered cause for rejection.

When requested by the Engineer, all PVC pipe will be tested after laying and backfilling by pulling a deflection detection device. The device shall verify less than 5% deflection in all pipe sections.

6.7.7 CONNECTIONS TO EXISTING MAINS:

A. All connections to water mains in use shall be made by the Contractor unless otherwise provided in the Special Conditions.

B. The Contractor shall notify the City at least 48 hours in advance of such connections.

C. Existing City water lines can only be shut down by crews authorized by the City.

D. The Contractor shall also provide written notice giving the date of the notice, the date and time of the shutdown, and the duration of the shutdown. Major shutdowns shall only occur between 2:00 a.m and 7:00 a.m.

E. The maximum time allowed for shutdown shall be 4 hours. If the Contractor should need more than the above limit, it shall be necessary to turn on the water for at least 1 hour before the next period of shutdown begins.

All crosses or other specials required to be inserted in any main already in use shall be furnished and set by the Contractor. The Contractor shall furnish the special, as shown on the Approved Plans, and all other material required. He shall make all necessary excavations to assure gradual transition between the new and existing water main, and he shall perform all necessary backfilling to the requirements of Sections 6.6.12 and 6.6.13.

6.7.8 DISRUPTION OF SERVICE:

Where the connection of new work to old requires interruption of service and notification of customers affected, the City, the Engineer, and the Contractor shall mutually agree upon a date for connections which will allow ample time to assemble labor and materials, and to notify all customers affected. The Contractor will be required to notify all affected customers and the City 24 hours in advance of service being interrupted.

6.7.9 WET TAP CONNECTIONS:

Where connections are made between new work and existing pipe lines, such connections shall be made in a thorough, neat manner using suitable and proper fittings to suit the conditions encountered. Each connection with an existing water line shall be made at a time under conditions which will least interfere with normal user consumption and as authorized by the City. Suitable facilities shall be provided for proper dewatering, drainage and disposal of all water removed from the dewatered lines and excavations without damage to adjacent property. Where bolted flexible couplings or transitions are required, they shall be constructed of material corresponding to the pipe indicated in the following table:

TYPE OF PIPE	COUPLING MATERIAL
Steel Pipe	Ductile Iron or Steel
Ductile Iron Pipe (earth covered or inaccessible to periodic inspection)	Ductile Iron or Cast Iron
Ductile Iron Pipe (accessible to periodic inspection and painted)	Ductile, Cast Iron or Steel
Polyvinyl Chloride	PVC or Ductile Iron

Couplings shall be equal to Smith-Blair, Dresser, Blair, or Rockwell.

Great care shall be taken to prevent line contamination when dewatering, cutting, or making connection with existing pipes used for conveyance or distribution of potable water for domestic or public use. The Contractor shall conduct his operations in such a manner that no trench water, mud, or other contaminating substances are permitted to get into the connected line or lines at any time during the progress of the work.

6.7.10 CONCRETE BLOCKING:

Concrete thrust blocking shall be placed at bends, tees, and crosses or as directed by the Engineer. Blocking shall be Class 3000 psi (1-1/2" minus aggregate) concrete mix poured in place. Concrete blocking, when placed as indicated on the Standard Drawing, shall be bearing against solid undisturbed earth at the sides and bottom of the trench excavation and shall be shaped so as not to obstruct access to the joints of the pipe or fittings. Payment for blocking will be included in the unit price for water line installed.

6.7.11 CONTRACTED REPAIR WORK:

Certain repair work may be specified in the Contract Documents as part of a Contract. This work shall be done as specified/contracted and in accordance with this section.

6.7.12 ACCIDENTAL REPAIR WORK:

If, for any reason, the Contractor accidentally cuts an existing water line or in any way disrupts water service, he shall notify the City immediately. It shall be the Contractor's responsibility to immediately repair or replace the damaged pipe at no additional cost to the City.

6.8 TESTING AND DISINFECTING FIELD TESTS:

All pipe and appurtenances shall be subjected to a hydrostatic test after they are laid. The Contractor shall be responsible to assure that each section of pipe between valves shall be tested as soon as possible after laying, or when directed by the Engineer.

At points where pressure reaction and movement may occur, such as at bends, tees and plugs the pipe shall be properly blocked or braced.

Where permanent blocking is not required, the Contractor shall furnish and install temporary blocking and remove it after testing. All costs to the Contractor for installing temporary blocking shall be borne by the Contractor. The Contractor shall furnish all pumping apparatus, labor, tools, pressure gauges and other equipment for making the tests.

Where the City has water available for testing, it may be furnished without charge upon arrangement with the City. All costs of tapping and piping shall be borne by the Contractor unless otherwise specified in the Special Conditions. Where water is not available from the City, the Contractor shall provide water from an approved source for testing.

Hydrostatic tests shall be performed on every complete section of water main between two gate valves or equivalent (in the determination of the City Engineer), and each valve shall withstand the same test pressure as the pipe, with no pressure active in the section of pipe beyond the closed gate valves.

All water service connections, for whatever purpose and at whatever time, shall be included in the pressure test. A visual inspection shall be made of each and every connection made to an existing main when, in the determination of the City Engineer, the test procedure specified in this section cannot be accomplished.

Each section of pipe line to be tested shall be slowly filled with water so that the specified test pressure is reached at the highest point in the section of pipe line under test. This pressure shall be corrected to the elevation of the test gauge by means of a pump connected to the pipe in a manner satisfactory to the Engineer.

The Contractor shall subject the pipe to a hydrostatic pressure 150% of the working pressure of the supply main, but not more than 200 pounds per square inch, based on the elevation of the highest point of the section of pipe line under test and corrected to the elevation of the test gauge.

All exposed pipes, fittings, valves and joints shall be carefully examined during the test. Any cracked or defective pipes, fittings and valves discovered during the pressure test, shall be removed and replaced by the Contractor with sound material and the test repeated as required, at the expense of the Contractor. All testing shall be done in the presence of a duly authorized representative of the City.

6.8.1 LEAKAGE TEST:

After the pressure test has been satisfactorily completed, the Contractor shall continue testing the water lines for leakage. The Contractor shall furnish all pumping apparatus, labor, tools, pressure gauges, measuring devices for leakage test, and other equipment required for making the test.

The duration of the leakage test shall be not less than 2 hours. During the leakage test the piping shall be subjected to a minimum hydrostatic pressure of 150% of the working pressure of the supply main, but not more than 200 pounds per square inch, based on the elevation of the highest point of the section of pipe line under test and corrected to the elevation of the test gauge.

Leakage shall be defined as the quantity of water that must be supplied into any section of newly laid pipe line, or any valved section thereof, to maintain pressure within .5 psi of the specified test pressure after the air in the pipe line has been expelled and the pipe has been filled with water.

The allowable leakage in the water lines shall not exceed that specified in the latest revision of AWWA Standard C600 “Installation of Ductile Iron Water Mains and Appurtenances" or the latest revision of AWWA C900 (PVC), or the latest revision of AWWA C200 (Steel). Should any test of the pipe disclose leakage greater than that specified above, the Contractor shall, at his own expense, locate and repair defective joints, disinfect and retest until the leakage is within the specified allowance.

6.8.2 RECORDS AND DOCUMENTATION:

Both the pressure tests and leakage tests shall be recorded by the Inspector. Records shall contain the length of pipe tested, size of pipe, type of pipe, rated working pressure of pipe, time and duration of test(s), pressure(s) used, complete list of test equipment used, list of personnel performing the test(s), and any comments about the test. Three sets of

test records shall be submitted to the City bearing the name and signature of the Contractor's authorized test supervisor(s).

6.8.3 TESTING SECTION WITH HYDRANTS INSTALLED:

When hydrants are included with the section of main pipe to be tested, the testing shall be done as specified in Section 6.4.3E.

6.8.4 TESTING EXTENSIONS FROM EXISTING MAINS:

The Contractor shall be responsible for following these procedures. Where an existing water main is extended with new pipe to a new valve, the connection of the new pipe to existing pipe shall not be made until after hydrostatic tests have been made to the required pressure in both directions against the new gate valve. This shall be accomplished by a temporary cap or plug installed on the end of the new pipe, beyond the new gate, as close as possible to the existing pipe for testing purposes.

The short length of pipe between the temporary cap or plug end with the new gate valve in the closed position, with no hydrostatic pressure active on the opposite side of the gate valve, shall be subjected to the required test pressure. The same test shall be made against the other side of new gate valve when that section of pipe is tested with no hydrostatic pressure active in the short section of pipe toward the existing main pipe.

6.9 DISINFECTION OF WATER MAINS:

6.9.1 GENERAL:

Before being placed in service, all new water lines and repaired portions or extensions of, existing mains shall be chlorinated in accordance with these standards or AWWA Standard C651 except the disinfecting water shall contain a minimum of 50 ppm of chlorine. The water shall be tested in the presence of the City Inspector to verify the 50 ppm of chlorine.

6.9.2 FLUSHING:

Sections of pipe to be disinfected shall first be flushed to remove any solids or contaminated material that may have become lodged in the pipe. A tap shall be provided at the end of the main (where applicable) large enough to develop a velocity of at least 2.5 fps in the main. One 2-1/2 inch tap will, under normal pressure, provide this velocity in pipe sizes up to and including 12-inch. The tap shall be provided with a ground-level hose connection with a shutoff valve. Care shall be taken to see that the disinfecting solution is flushed thoroughly from the water supply and the water mains.

Taps required by the Contractor for chlorination or flushing purposes shall be provided by

him as a part of the construction of water mains.

Where dry calcium hydrochlorite is used for disinfection of the pipe, flushing shall be done after disinfection. The flushing hydrant shall be installed in the park strip between the sidewalk and curb and gutter and shall be installed in a 36-inch diameter PVC cylinder. Flushing hydrants located in the road shall need approval by the Hyrum City Water Department and shall be installed in a 48-inch vault or manhole.

Care shall be taken to see that the heavily chlorinated water used for disinfecting the water lines shall be flushed thoroughly from the water supply lines and the water mains. The environment into which the chlorinated water is to be discharged shall be inspected and if there is a possibility that the chlorinated discharge will cause damage, a neutralizing chemical shall be applied to the water to be wasted to thoroughly neutralize the chlorine residual remaining in the water. No heavily chlorinated waters shall be permitted to mix with "live" waters such as streams, rivers or lakes.

6.9.3 REQUIREMENT OF CHLORINE:

Before being placed into service, all new mains and repaired portions of, or extensions to, existing mains shall be chlorinated so that a chlorine residual of not less than 25 ppm remains in the water after standing 24 hours in the pipe. The initial chlorine content of the water shall be not less than fifty (50) parts per million. The two above tests shall be made in the presence of the City Inspector and record made for the City files.

6.9.4 FORM OF APPLIED CHLORINE:

Chlorine shall be applied by one of the methods which follow, to give a dosage of not less than 50 ppm of available chlorine. Calcium Hypochlorite granules must not be used on solvent welded plastic pipe or on threaded-joint steel pipe.

6.9.5 DRY CALCIUM HYPOCHLORITE:

As each length of pipe is laid, sufficient high test calcium hypochlorite (65-70% chlorine) shall be placed in the pipe to yield a dosage of not less than 50 ppm available chlorine, calculated on the volume of the water which the pipe and appurtenances will contain.

The following table gives the amount of calcium hypochlorite (70% available chlorine) to be used for each 20 foot length of pipe to give a concentration of 50 ppm of available chlorine.

Amount of Calcium Hypochlorite for:

Diameter of Pipe	Each 20 ft Length in	Pounds Per

Inches	Tablespoonsful	1000 ft of Pipe
4	1/2	0.5
6	1-1/2	1.0
8	2-1/2	1.6
10	4	2.5
12	6	3.6
14	8	---

6.9.6 LIQUID CHLORINE:

A chlorine gas-water mixture shall be applied by means of a solution-feed chlorinating device, or the dry gas may be fed directly through proper devices for regulating the rate of flow and providing effective diffusion of the gas into the water within the pipe being treated. Chlorinating devices for feeding solutions of the chlorine gas, or the gas itself, must provide means for preventing the backflow of water into the chlorine.

6.9.7 CHLORINE-BEARING COMPOUNDS IN WATER:

A mixture of water and high-test calcium hypochlorite (65-70% CI) may be substituted for the chlorine gas-water mixture. The dry powder shall first be mixed as a paste and then thinned to a 1 percent chlorine solution by adding water to give a total quantity of 7.5 gallons of water per pound of dry powder. This solution shall be injected in one end of the section of main to be disinfected while fitting the main with water in the amounts as shown in the table which follows.

Chlorine Requirements for 100-Ft. Lengths
of Various Sizes of Pipe

Pipe Size Inches	Volume of 100-ft Length Gals.	Amount Required to 100% Chloride LB.	Give 50 ppm Cl. 1% Chlorine-Water Solution in Gals.
4	65.3	0.027	1/3
6	146.5	0.061	3/4
8	261.0	0.108	1-1/3
10	408.0	0.170	2
12	588.7	0.240	3

6.9.8 SODIUM HYPOCHLORITE:

Sodium Hypochlorite, commercial grade (15% CI) or in the form of liquid household

bleach (5% CI) may be substituted for the chlorine gas-water mixture. This liquid chlorine compound may be used full strength if diluted with water and injected into the main in correct proportion to the fill water so that dosage applied to the water will be at least 50 ppm.

6.9.9 POINT OF APPLICATION:

The preferred point of application of the chlorinating agent is at the beginning of the pipe line extension or any valved section of it, and through a corporation stop inserted by the utility in the horizontal axis of the pipe. The water injector for delivering the chlorine-bearing water into the pipe should be supplied from a tap made by the utility on the pressure side of the gate valve controlling the flow into the pipe line extension. Alternate points of application may be used when approved or directed by the Engineer.

6.9.10 RATE OF APPLICATION:

Water from the existing distribution system, or other source of supply, shall be controlled to flow very slowly into the newly laid pipe line during application of the chlorine. The rate of chlorine gas-water mixture or dry gas feed shall be in such proportion to the rate of water entering the newly laid pipe that the dosage applied to the water will be at least 50 parts per million.

6.9.11 PREVENTING REVERSE FLOW:

Valves shall be manipulated so that the strong chlorine solution in the line being treated will not flow back into the line supplying the water. Check valves may be used if desired.

6.9.12 RETENTION PERIOD:

Treated water shall be retained in the pipe at least twenty-four (24) hours. After this period, the chlorine residual at pipe extremities and at other representative points shall be at least 25 parts per million.

6.9.13 CHLORINATING VALVES AND HYDRANTS:

In the process of chlorinating newly laid pipe, all valves or other appurtenances shall be operated while the pipe line is filled with the chlorinating agent and under normal operating pressure.

6.9.14 FINAL FLUSHING AND TESTING:

In the process, chlorine treated water shall be thoroughly flushed from the newly laid pipe until the replacement water throughout its length shows, upon test, the absence of chlorine. In the event chlorine is normally used in the source of supply, then the tests shall show a residual not in excess of that carried in the system.

After flushing, the Engineer will arrange for taking samples by the utility or by health authorities.

6.9.15 BACTERIOLOGICAL SAMPLES:

The Contractor shall take 3 bacteriological samples from the installed pipeline with the Inspector present. The locations of the samples shall be at intervals along the pipeline as directed by the Engineer. The sampling bottles and methods used shall be in accordance with the Utah State Board of Health, "Public Drinking Water Regulations," or other similar applicable regulating agencies. Sample results shall be sent to the City Administrator and the City Water Superintendent. The City will then transport the samples to the State Health Department or other approved testing laboratory.

6.9.16 RECORDS AND DOCUMENTATION:

All disinfection operations shall be recorded by the Contractor. Records shall contain the length of pipe disinfected, size of pipe, type of pipe, location of pipe, date, time and duration of disinfecting operations, complete list of equipment used and personnel performing the disinfection, and any comments about the disinfection operations. Three sets of these records shall be submitted to the City, bearing the name and signature of the persons performing the disinfection.

6.9.17 REPETITION OF FLUSHING AND TESTING:

Should the initial treatment result in an unsatisfactory bacterial test, the original chlorination procedure shall be repeated by the Contractor until satisfactory results are obtained. Failure to get a satisfactory test shall be considered as failure of the Contractor to keep the pipe clean during construction, or to properly chlorinate the main, and no additional payment will be made for reflushing and rechlorinating.

6.10 SECONDARY PRESSURE IRRIGATION INSTALLATIONS:

6.10.1 DESIGN CRITERIA:

A. All secondary pressure irrigation installations shall comply with these standards.

B. Preliminary design shall be submitted to Hyrum City and to the City Engineer at least two weeks prior to the next regularly scheduled meeting of the Planning and

Zoning Commission.

C. Construction of the project shall not begin until complete plans and any modifications to these specifications have been approved, in writing, by the City.

D. No part of the pressure irrigation system shall be put into operation until approval to do so has been given, in writing, by the City.

E. Plans shall be stamped, signed and dated by a professional engineer, registered in the State of Utah, who has experience in designing pressure irrigation water projects and who will be responsible for the design.

6.10.2 SERVICE LINES:

Service lines connected to the public irrigation system shall meet the following criteria:

A. Service lines shall be installed by a General Utility Contractor licensed and bonded in Utah.

B. Service lines will be schedule 80 PVC pipe composed of PVC compounds meeting the requirements of ASTM D1784. Other pipe must be approved by the City Engineer prior to installation.

C. Service lines shall have a nominal inside diameter of not less than (1") one inch nor greater than (2") two inches unless approved by the City.

D. Each dwelling unit shall be served by an individual service line. Multi-family dwelling units may be served otherwise where approved by the City.

E. Service lines shall not be located under driveways.

F. Maintenance of the line from the home to the main line shall be the responsibility of the property owner.

G. Valves on service lines shall be equipped with adjustable 4” cast iron valve box riser with 5-1/4” cast iron lid labeled “IRRIGATION”.

6.10.3 DESIGN PERIOD:

The irrigation system shall be designed to serve the ultimate service area and shall be based on the best information available, including area master plans, current zoning regulations and approved planning and zoning reports when available.

6.10.4 DESIGN CAPACITY:

The distribution system shall be designed to insure that a minimum of 20 psi exists at all points within the system during peak instantaneous demand conditions.

6.10.5 SECONDARY IRRIGATION MAIN SIZE:

All secondary irrigation mains shall be 6 inches in diameter or larger provided that the instantaneous peak flows meet the requirement of paragraph 6.8.4.

6.10.6 WATER MAIN DEPTHS:

Irrigation lines shall be installed to a minimum depth of (3') three feet to the top of the pipe.

6.10.7 DRAINS:

Drains shall be provided at low points in the mains and at all dead ends so the lines can be completely drained in the fall.

6.10.8 VALVES:

Valves shall be placed in the system to that sections of the pipe, no longer than one thousand feet, may be isolated and shut off from the rest of the system so repair may be made with a minimal amount of water connections put out of service. When connecting to existing or new lines at tees, a minimum of three valves shall be installed. Where crosses are used, a minimum of four valves shall be used.

6.10.9 MATERIAL REQUIREMENTS:

A. GENERAL:

Unless specifically designated otherwise in each case, all materials and equipment furnished for permanent installation in the work shall conform to applicable standard specifications and shall be new, unused and undamaged when installed or otherwise incorporated in the work. No material or equipment shall be used by the Contractor for any purpose other than that intended or specified. All materials not conforming to these specifications shall be specifically approved in writing by the City prior to delivery to the jobsite. Any material or equipment found not conforming with City Standards and Specifications is subject to rejection.

B. PIPE FOR WATER MAINS:

(As previously specified in Section 6.2)

6.10.10 VALVES FOR PRESSURE IRRIGATION SYSTEMS:

All valves installed in pressure irrigation systems shall conform to Section 6.2.3 A and B.

6.10.11 BLOW-OFF HYDRANT:

Blow-off hydrants shall be non-freezing, self-draining type, with an overall length of 4.5 feet set underground in a 36" valve box. Hydrants will be furnished with a 2" FIP inlet, a non-turning operating rod, and open to the left. All working parts shall be of bronze-to-bronze design, and be serviceable from above grade with no digging. The outlet shall be a 2-inch FIP coupling with plug, as manufactured by Kupferle Foundry Co., or approved equal.

6.10.12 TESTING:

All pipe shall be flushed in accordance with applicable specifications of Section 6.9.2 to remove any solids or foreign material that may be lodged in the pipe. The pipe shall then be subjected to a leakage test in accordance with Section 6.8.1. The pipe shall be tested at a minimum hydrostatic pressure of 150% of the working pressure of the supply main, but not more than 200 pounds per square inch, based on the elevation of the highest point of the section of pipe line under test and corrected to the elevation of the test gauge..

HYRUM CITY

Power & Light

SECTION 7

HYRUM CITY
GENERAL REQUIREMENTS
AND
SPECIFICATIONS
FOR
ELECTRICAL INSTALLATIONS

Revised 3-7-2015

7. GENERAL REQUIREMENTS AND SPECIFICATIONS FOR ELECTRICAL INSTALLATIONS

7.1 GENERAL REQUIREMENTS:

7.1.1 GENERAL:

All electrical work shall be in compliance with the latest edition of the National Electric Code, International Building Code, ICC Electrical Code and the National Electrical Safety Code except where these specifications are more stringent. If there is a conflict between standards, the most stringent shall rule. The customer shall provide all secondary service wire from the point of connection to the meter base on underground services. Customer shall provide conduit in place from the point of connection to the meter base with pulling tape provided in the conduit. The city's electrical department will pull the secondary service wire. Hyrum City will provide all service wire to the meter mast on overhead connections.

7.1.2 INSTALLATION:

A. Voltage Cables: All primary voltage cables shall be buried 42-inches deep from finish grade. All secondary voltage cables shall be buried 24-inches deep from finish grade except when they cross streets in which case they shall be buried 42-inches deep from finish grade. All cable shall be installed in not less than Schedule 40 conduit, 3-inches in diameter or larger, depending on the cable size and distance. Pulling tape shall be provided in the conduit and the city's electrical department will pull all cable.

B. Conduit: All conduit shall be embedded in sand except at street crossings. The sand shall extend a minimum of 2-inches below and 4-inches above the conduit. All cable crossing streets, shall be enclosed in an appropriate diameter conduit encased in concrete for a minimum depth of 4-inches on all sides, top and bottom of the conduit. Hyrum City provides all service wire to the meter mast on overhead connections. The Contractor shall provide all secondary service wire from the point of connection to the meter base on all underground services. The contractor shall provide conduit in place from the point of connection to the meter base with pulling tape provided in the conduit. The city's electrical department

will pull the secondary service wire. Hyrum City will provide all service wire to the meter mast on overhead connections.

C. Junction Boxes: Primary and secondary junction boxes shall be placed so as to avoid being filled with drainage water.

D. Box Pads: Box pads shall be placed on well compacted and level ground. The top of the transformer pad shall be at least 2-inches above the sidewalk. Two ground rods 5/8" diameter x 8' long shall be driven at each transformer at 5' center to center and one at each primary junction point. All concentric neutrals shall be connected and commonly grounded to the driven ground rod.

7.1.3 INSPECTION:

All work shall be inspected and approved by the City's Electrical Department personnel before burial. Final inspection and energizing the system will be done by the City's Electrical Department.

7.2 SERVICE:

7.2.1 RESIDENTIAL SERVICE:

All residential services shall be sized in accordance with the following table. The minimum service permitted shall be 150 amp service:

SF of Residence	Service	Secondary Conductor	Neutral
Under 1200 SF	150 amp	1/0 Alum	#2 AWAC
1200SF & Above	200 amp	4/0 Alum	2/0 AWAC

7.2.2 GROUNDING:

The grounding system shall have sufficient grounding electrodes, effectively bonded together, to prevent the maximum resistance to ground exceeding 25 ohms.

7.3 MATERIALS:

7.3.1 CONDUCTOR:

A. High Voltage or Primary Cable: The conductor shall be of "EC" Grade Aluminum (15 kV EPR- Jacked Cable, Concentric Neutral). The size shall be indicated on the drawings and approved by Hyrum City Electrical Department.

B. Low Voltage or Secondary Cable: Cable shall be tri-plexed aluminum "EC". Individual conductors shall be covered with XLP insulation rated 600 V.

C. Street Lights: Street light conductors shall be two #12 AWG in a 2" diameter conduit.

7.3.2 TRANSFORMERS:

A. Single-Phase Pad Mount Transformer: The transformer shall be ANSI Type II equipped with two (2) primary loadbreak bushings, with two (2) taps @ 2.5% above and below normal, three (3) secondary LV terminations shall be copper studs. Evaluation Formula inputs used shall be: $5/kW NL and $2/kW LL. Purchase preference is BEST Total Ownership Cost. Allowed KVA ratings are 25, 37.5, 50, 75, and 100 kVA. Primary voltage: 12,470/7,200 volts grounded Y. Secondary voltage: 240/120 volts. The HV Arrangement shall be Loop. Fusing shall be Flapper Bayonet-Dual Sensing. No loadbreak switch, LV breaker, arrester, gauges, shall be provided. The Drain Port shall use a ½" NPT Drain Plug. Tank Material shall be Mild Steel. Transformers are to be dead front. Markings shall be KVA Decal on the front with a duplicate exterior name plate. LV secondary bars installed Utilco – (3) PTF6-350CUP. Ground lugs to accommodate 1/0 bare copper.

B. Single-Phase Pad Mount with Line Tap: Same as A. above except with 3 primary loadbreak bushings needed.

7.3.3 TRANSFORMER PAD:

The transformer pads for transformers less than 100 KVA shall be Nordic single-phase box pad #CBP-37-43-15A (with cable openings 12" x 24") or approved equal. Concrete pads shall be approved by the Hyrum City Electric Department.

A. Site Preparation: All dirt beneath the pad site must be compacted and level prior to setting or pouring the pad to prevent settling.

B. Concrete: Concrete shall be made using 6 bags of standard brand of Portland cement per cubic yard. Steel reinforcement shall be No. 4 bars placed on 12-inch centers and in accordance with the concrete transformer pad drawing. The pad must be poured at least three full days prior to setting the transformer. Concrete shall be kept above freezing at least 72 hours after pouring. The finished surface must be completely flat and level.

C. Conduit Window Layout: Low voltage conduits shall be formed as tightly as possible against the right side of the opening and shall in no case extend further than 20-inches from the right side of the conduit window on a small pad (96" x 78") or 30-inches on a large pad (100" x 103"). Do not put any concrete in or under the conduit window. Use dirt to separate conduits. All construction shall be in accordance with the latest International Electric Code and approved by Hyrum City Electrical Department.

D. Clearances: The front of the pad should always face away from adjacent structures and be free of obstructions. At least 3 feet must separate the edges of the pad from any adjacent structure. The edges of the pad must be at least ten feet from any combustible structures.

7.3.4 PRIMARY VOLTAGE JUNCTION VAULT:

The primary voltage junction vault shall be three phase with hinged door, Nordic or approved equal.

7.3.5 SECONDARY JUNCTION BOX:

The secondary junction box shall be an upright pedestal type, Pencell-AG-20-HDX or approved equal.

7.3.6 CONDUCTOR FITTINGS:

Splices shall be pre-molded Elastimold 25S or approved equal. Loadbreak elbows shall be Elastimold 166 LRR or approved equal. Loadbreak Junctions shall be Elastimold 163 J3R7 or approved equal. Secondary connectors shall be CMC SSBC 360-UCI positioned as needed.

7.3.7 MARKING TAPE:

Marking tape shall be installed 12" above all buried cable. It shall be red in color, 3" wide and state; "Caution – Buried Electric Cable Below".

7.3.8 SUBDIVISION POLE TOP LUMMINARIES:

Pole Top Luminaries shall be mounted atop a tapered aluminum pole. The mounting height shall be 20 feet above finish grade. The fixture shall be AMERICAN LIGHTING – AMERICAN REVOLUTION LED SERIES #247L 20LEDE10 MVOLT 4K R2 AY __ TL LDR. Poles shall be 20' aluminum CONTEMPO #E-200P.P by I.T.T.. An in-line fuse located at the closest transformer or secondary junction box shall be 6 amp, type KLKR6. The concrete base for the light pole shall be set approximately one inch above the finish grade of the sidewalk.

HYRUM CITY

Power & Light

STANDARD DETAIL DRAWINGS

HYRUM CITY ELECTRICAL DEPARTMENT

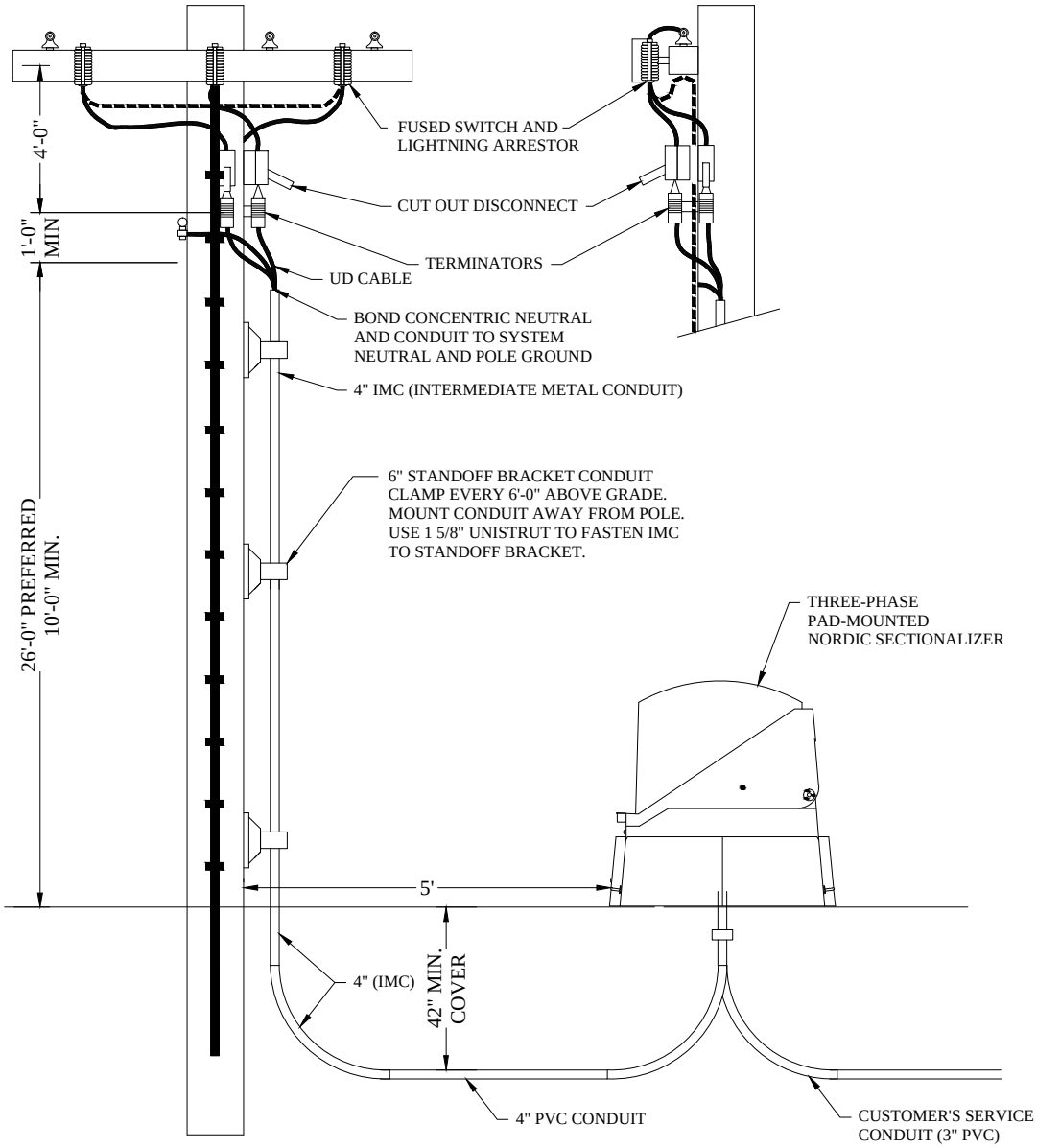

NOTES:

1. CONTRACTOR SHALL PROVIDE MATERIALS FOR THE DIP (OR RISER). CONTRACTOR INSTALLS FIRST 10 FEET UP THE POLE AND CITY WILL INSTALL ABOVE THAT POINT AND PULL CONTRACTOR-PROVIDED CABLE.
2. CITY SHALL PROVIDE METER BASE AND TEST SWITCH ON THREE-PHASE SERVICE.
3. USE CORROSION TAPE ON ALL IMC ELBOWS.
4. INSTALLATION OF SPARE CONDUIT FROM RISER POLE TO TRANSFORMER PAD IS RECOMMENDED.
5. REFER TO METER SECTION FOR METERING INSTALLATION.

THREE PHASE PRIMARY UNDERGROUND SERVICE

REV	REVISION RECORD	ENG BY:	APPD BY:	DATE
5				
4				
3				
2				
1				

HYRUM CITY Power & Light

HYRUM CITY ELECTRICAL DEPARTMENT
ELECTRICAL SERVICE REQUIREMENTS

THREE PHASE PRIMARY UNDERGROUND SERVICE

SCALE:	INITIAL ISSUE DATE:	SHEET	REV
NOT TO SCALE	01/01/2015	7-7	

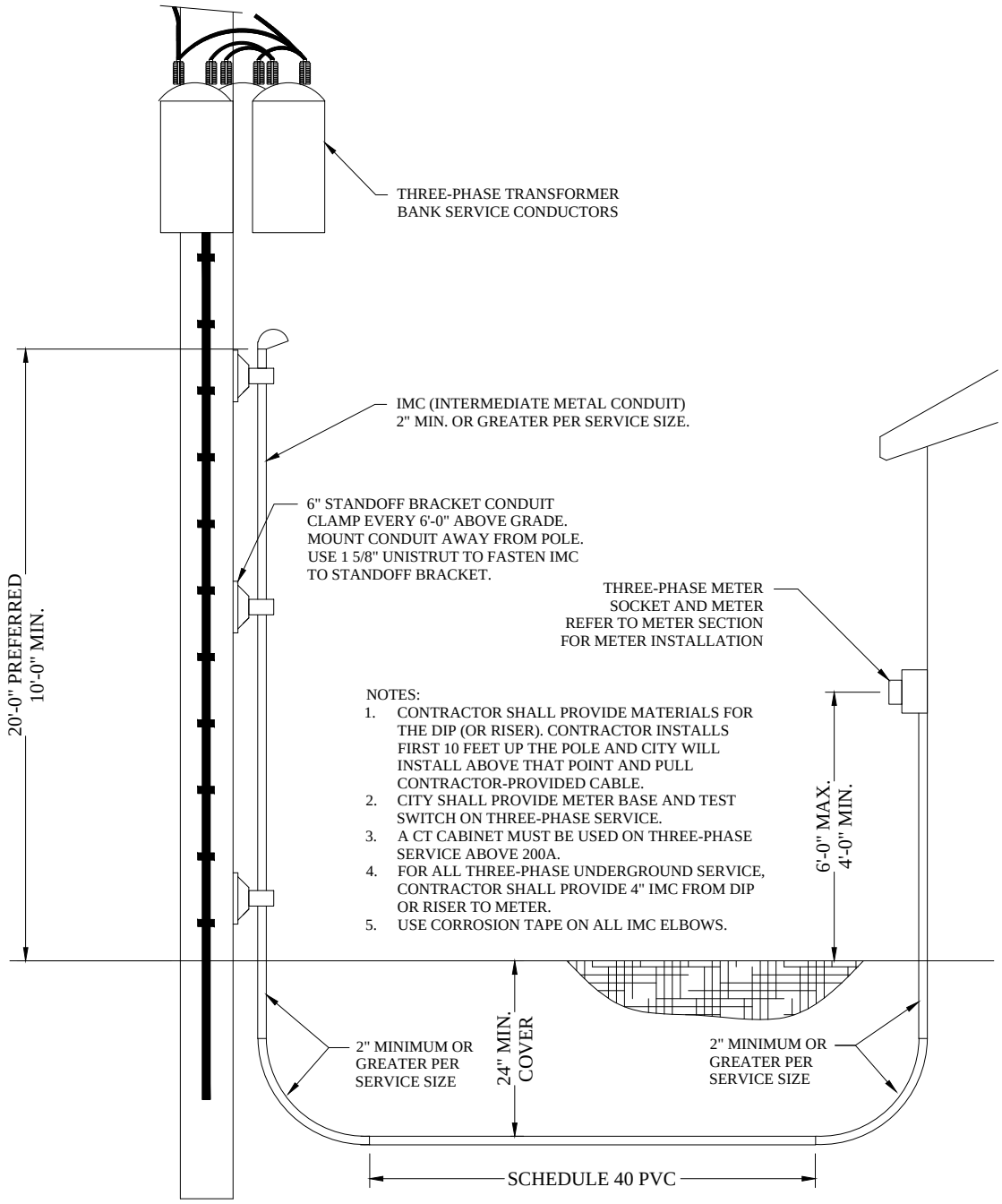

NOTES:

1. CONTRACTOR SHALL PROVIDE MATERIALS FOR THE DIP (OR RISER). CONTRACTOR INSTALLS FIRST 10 FEET UP THE POLE AND CITY WILL INSTALL ABOVE THAT POINT AND PULL CONTRACTOR-PROVIDED CABLE.
2. CITY SHALL PROVIDE METER BASE AND TEST SWITCH ON THREE-PHASE SERVICE.
3. A CT CABINET MUST BE USED ON THREE-PHASE SERVICE ABOVE 200A.
4. FOR ALL THREE-PHASE UNDERGROUND SERVICE, CONTRACTOR SHALL PROVIDE 4" IMC FROM DIP OR RISER TO METER.
5. USE CORROSION TAPE ON ALL IMC ELBOWS.

THREE PHASE SECONDARY UNDERGROUND SERVICE

REV	REVISION RECORD	ENG BY:	APPD BY:	DATE
5				
4				
3				
2				
1				

HYRUM CITY Power & Light

HYRUM CITY ELECTRICAL DEPARTMENT
ELECTRICAL SERVICE REQUIREMENTS

THREE PHASE SECONDARY UNDERGROUND SERVICE

SCALE:	INITIAL ISSUE DATE:	SHEET	REV
NOT TO SCALE	01/01/2015	7-8	

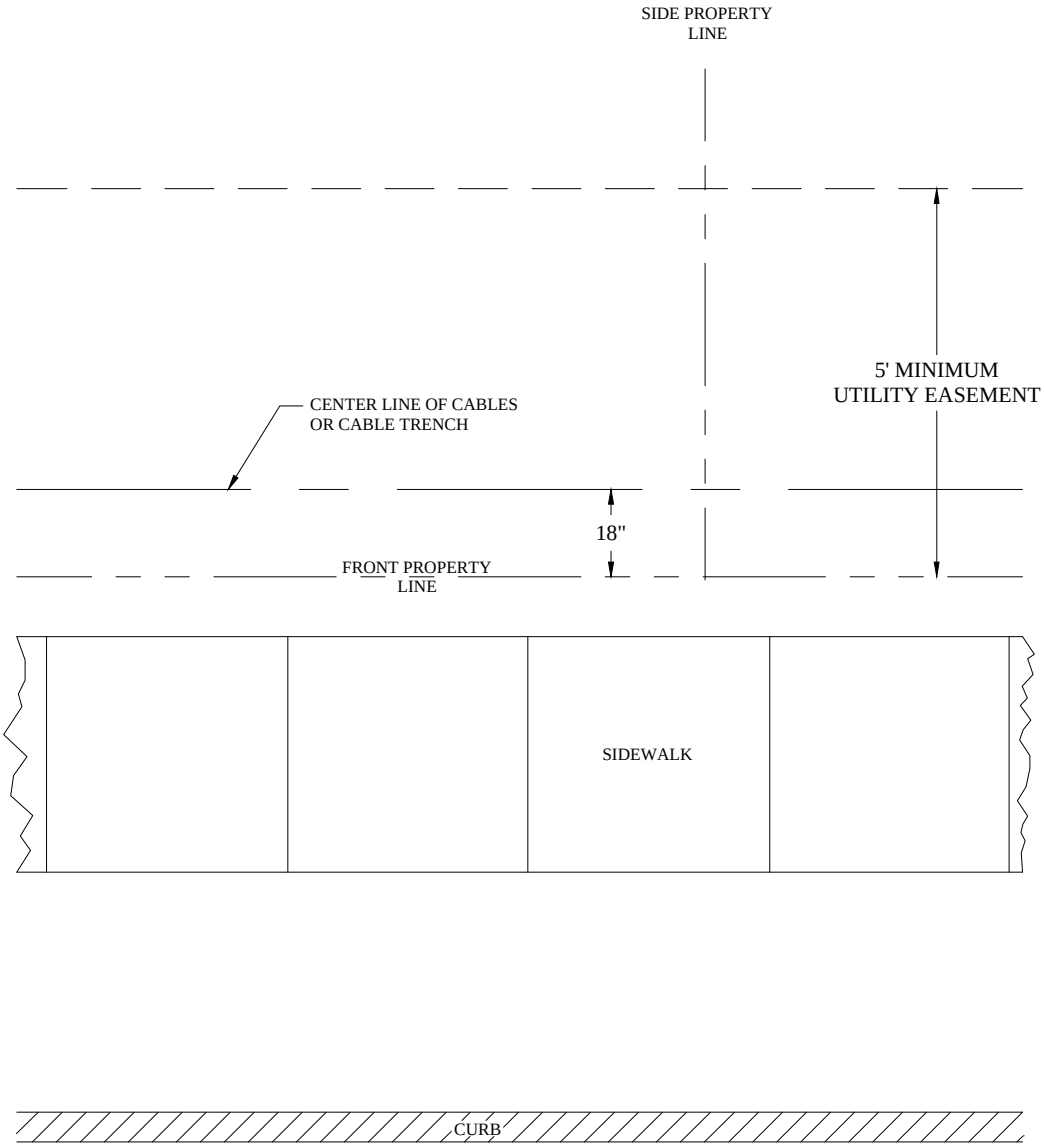

UNDERGROUND CABLES
FRONT LOT LINE CONSTRUCTION

REV	REVISION RECORD	ENG BY:	APPD BY:	DATE
5				
4				
3				
2				
1				

HYRUM CITY Power & Light

HYRUM CITY ELECTRICAL DEPARTMENT
ELECTRICAL SERVICE REQUIREMENTS

UNDERGROUND CABLES
FRONT LOT LINE CONSTRUCTION

SCALE:	INITIAL ISSUE DATE:	SHEET	REV
NOT TO SCALE	01/01/2015	7-9	

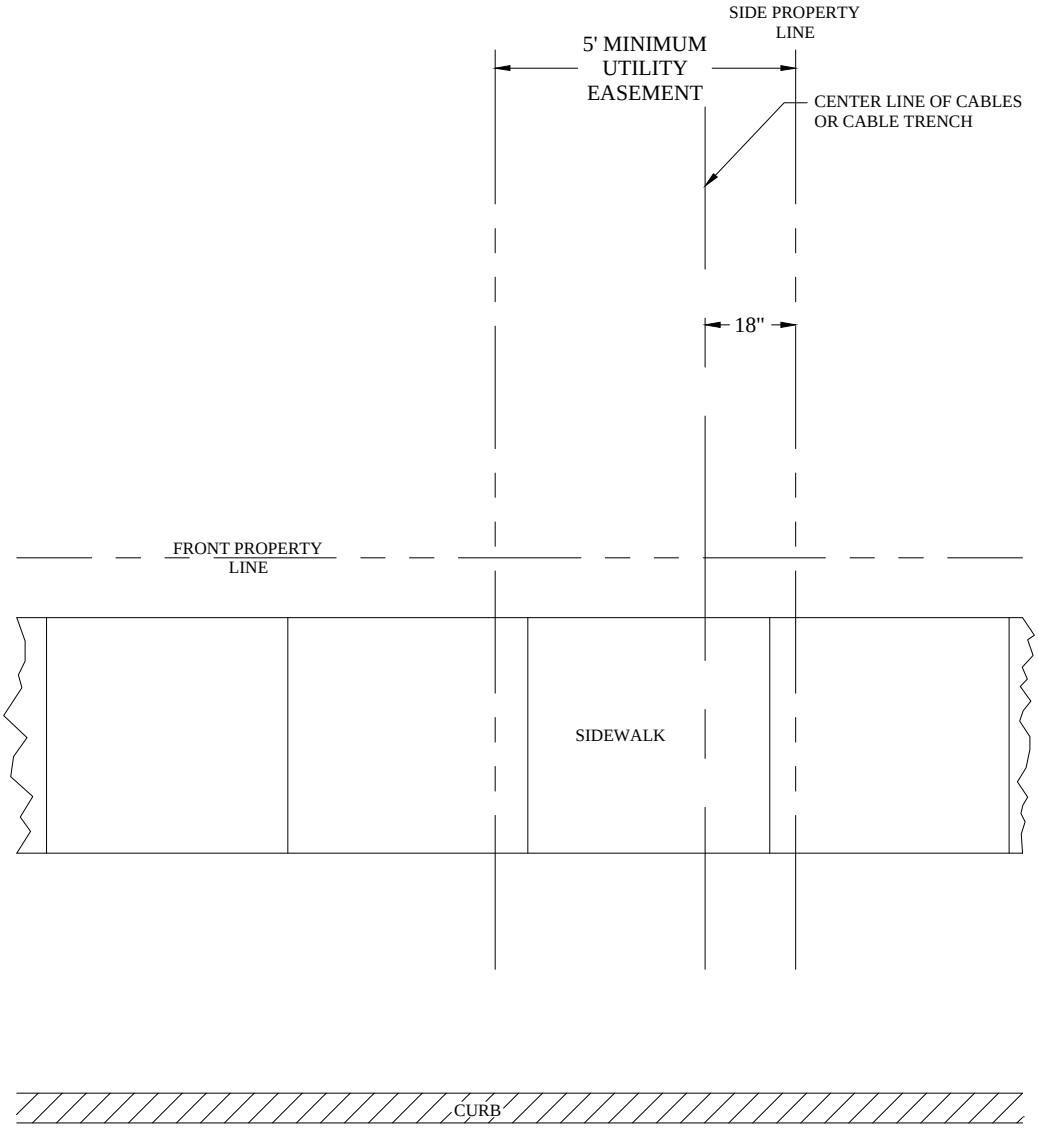

UNDERGROUND CABLES
SIDE LOT LINE CONSTRUCTION

REV	REVISION RECORD	ENG BY:	APPD BY:	DATE
5				
4				
3				
2				
1				

HYRUM CITY Power & Light

HYRUM CITY ELECTRICAL DEPARTMENT
ELECTRICAL SERVICE REQUIREMENTS

UNDERGROUND CABLES
SIDE LOT LINE CONSTRUCTION

SCALE:	INITIAL ISSUE DATE:	SHEET	REV
NOT TO SCALE	01/01/2015	7-10	

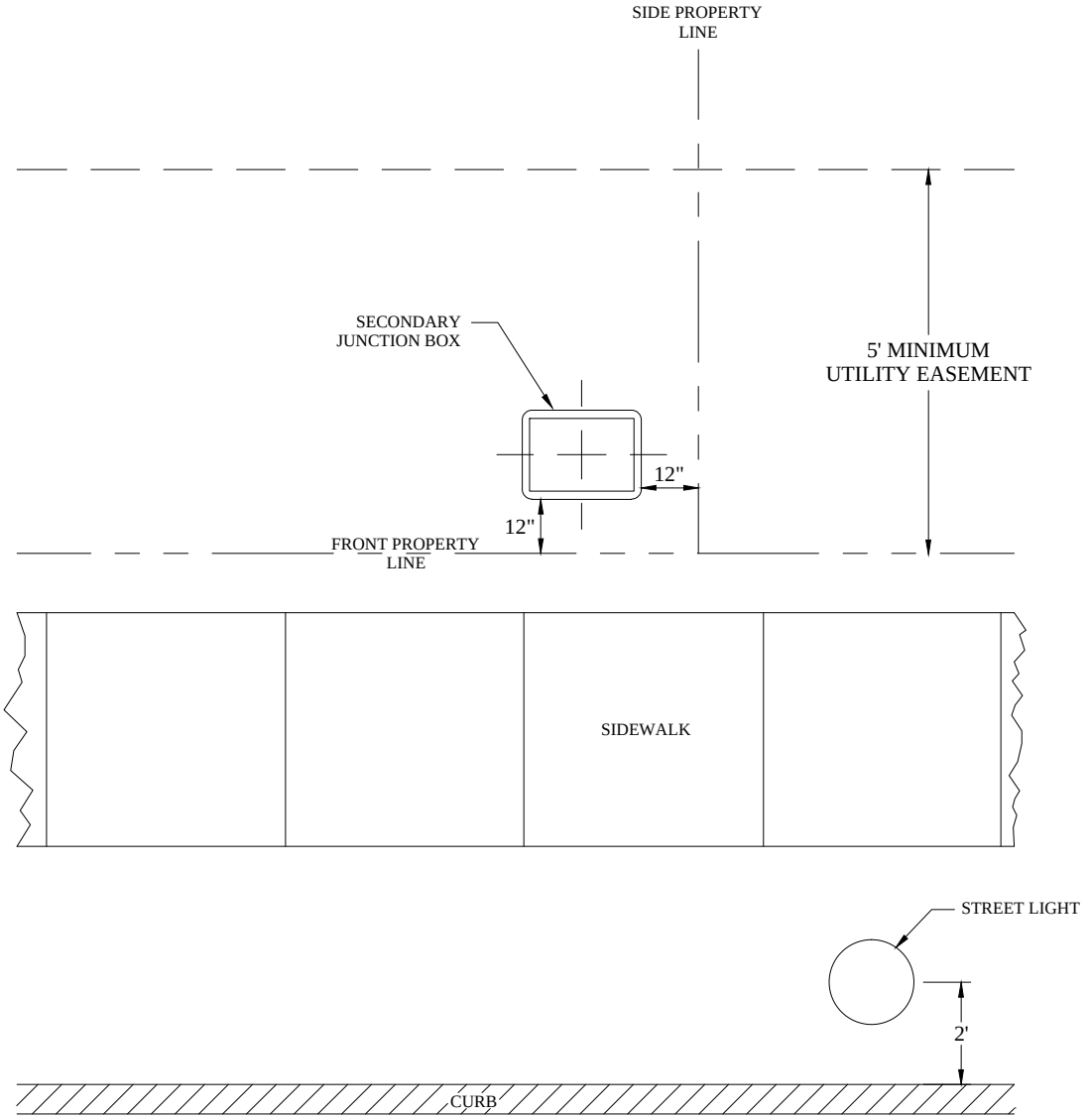

SECONDARY JUNCTION BOXES
FRONT LOT LINE CONSTRUCTION

REV	REVISION RECORD	ENG BY:	APPD BY:	DATE
5				
4				
3				
2				
1				

HYRUM CITY Power & Light

HYRUM CITY ELECTRICAL DEPARTMENT
ELECTRICAL SERVICE REQUIREMENTS

SECONDARY JUNCTION BOXES
FRONT LOT LINE CONSTRUCTION

SCALE:	INITIAL ISSUE DATE:	SHEET	REV
NOT TO SCALE	01/01/2015	7-11	

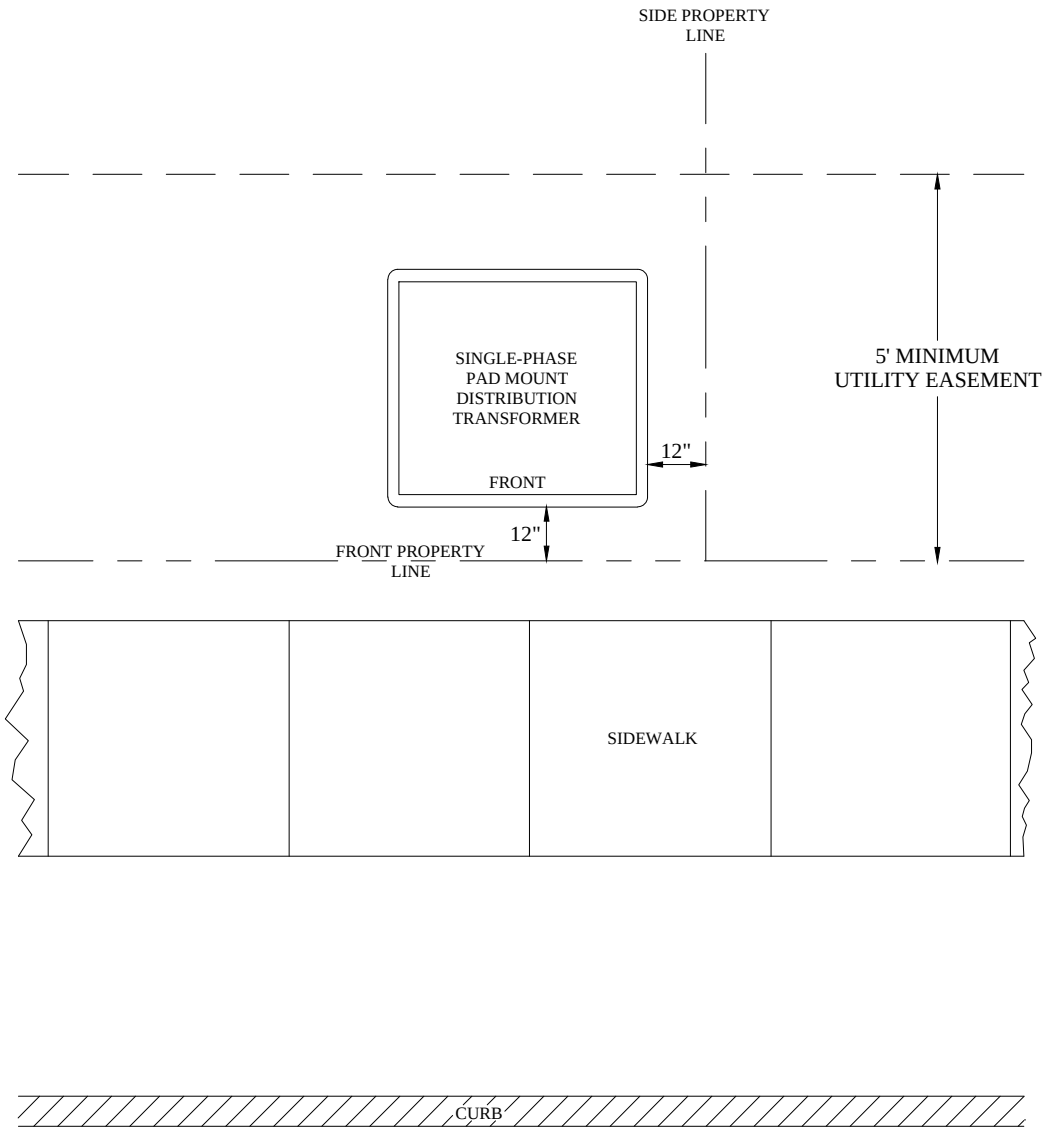

SINGLE-PHASE PAD MOUNT TRANSFORMERS FRONT LOT LINE CONSTRUCTION

REV	REVISION RECORD	ENG BY:	APPD BY:	DATE
5				
4				
3				
2				
1				

HYRUM CITY Power & Light

HYRUM CITY ELECTRICAL DEPARTMENT
ELECTRICAL SERVICE REQUIREMENTS

SINGLE-PHASE PAD MOUNT TRANSFORMERS FRONT LOT LINE CONSTRUCTION

SCALE:	INITIAL ISSUE DATE:	SHEET	REV
NOT TO SCALE	01/01/2015	7-12	

NORDIC FIBERGLASS CBD-37-43-15A
TRANSFORMER BOX PAD OR APPROVED EQUAL

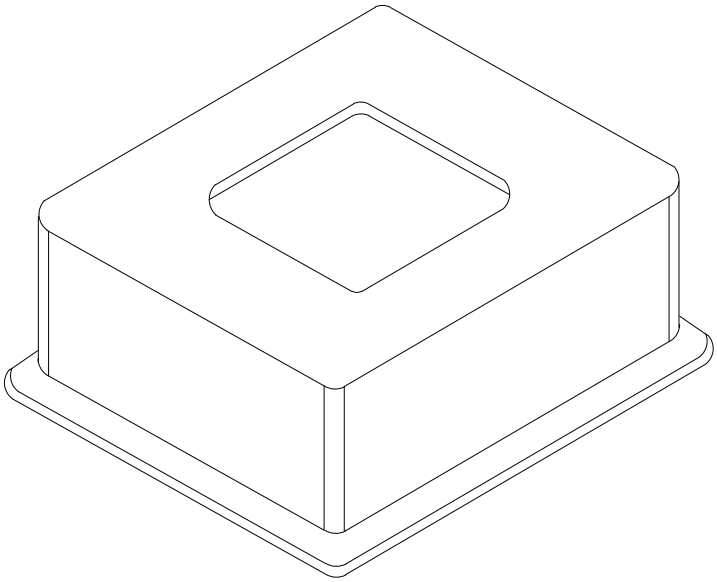

TRANSFORMER BOX PAD SPECIFICATIONS:

1. SHALL BE FIRE-RETARDANT COMPRESSION MOLDED FIBERGLASS CONSTRUCTION.
2. SHALL HAVE RIBS MOLDED INTO INTERIOR OF BOX PAD TO PROVIDE RESISTANCE TO TOP-LOADING DEFLECTION.
3. SHALL ACCOMMODATE TRANSFORMERS RANGING FROM 25 KVA UP TO 167 KVA.
4. SHALL HAVE EXTERNAL RIBS MOLDED INTO SIDE WALLS FOR RESISTANCE TO SIDE WALL DEFLECTIONS.
5. SHALL HAVE 6 ⅜" STAINLESS STEEL FLOATING NUT ASSEMBLIES AS STANDARD FOR BETTER PENTA-HEAD BOLT ALIGNMENT AND SUPERIOR PULL-OUT STRENGTH.

TOP MEASUREMENT	TOP OPENING	HEIGHT	BOTTOM FLANGE
37" X 43"	22" X 23.4"	15"	3.5" WIDE

6. FIBERGLASS SHALL RESIST FERTILIZERS, SALT AIR, AND ULTRAVIOLET ATTACKS.
7. SHALL BE RUS ACCEPTED
8. CONTRACTOR SHALL PROVIDE A MINIMUM OF EIGHT (8) FEET OF EXTRA CABLE WRAPPED INSIDE THE TRANSFORMER BOX PAD.
9. ALL TRANSFORMER PADS MUST BE SIZED AND APPROVED BY HYRUM CITY ELECTRICAL DEPARTMENT AND IN COMPLIANCE WITH THE INTERNATIONAL ELECTRICAL CODE.

TRANSFORMER PAD
PENCELL TYPE

REV	REVISION RECORD	ENG BY:	APPD BY:	DATE
5				
4				
3				
2				
1				

HYRUM CITY Power & Light

HYRUM CITY ELECTRICAL DEPARTMENT
ELECTRICAL SERVICE REQUIREMENTS

TRANSFORMER PAD
PENCELL TYPE

SCALE:	INITIAL ISSUE DATE:	SHEET	REV
NOT TO SCALE	01/01/2015	7-13	

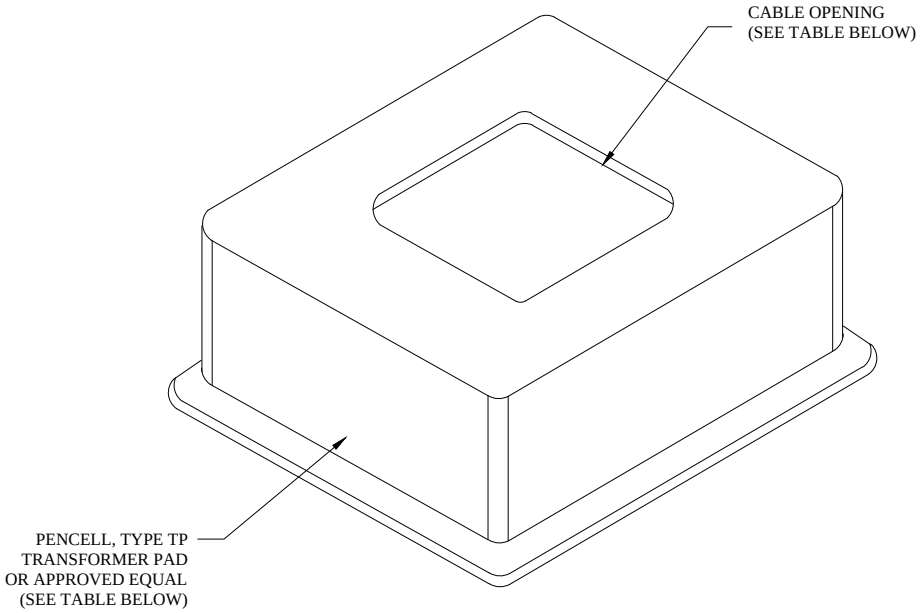

PART NO.	CABLE OPENING	TRANSFORMER PAD SIZE	WEIGHT
TP-4220	12" x 20"	42" x 42"	45 LBS
TP-4224	12" x 24"	42" x 42"	45 LBS
TP-4227	12" x 27"	42" x 42"	45 LBS

NOTE:

ALL TRANSFORMER PADS MUST BE SIZED AND APPROVED BY HYRUM CITY ELECTRICAL DEPARTMENT TO MATCH THE SIZE OF THE TRANSFORMER TO BE INSTALLED IN COMPLIANCE WITH THE NATIONAL ELECTRICAL CODE.

TRANSFORMER PAD
PENCELL TYPE TP

REV	REVISION RECORD	ENG BY:	APPD BY:	DATE
5				
4				
3				
2				
1				

HYRUM CITY Power & Light

HYRUM CITY ELECTRICAL DEPARTMENT
ELECTRICAL SERVICE REQUIREMENTS

TRANSFORMER PAD
PENCELL TYPE TP

SCALE:	INITIAL ISSUE DATE:	SHEET	REV
NOT TO SCALE	01/01/2015	7-14	

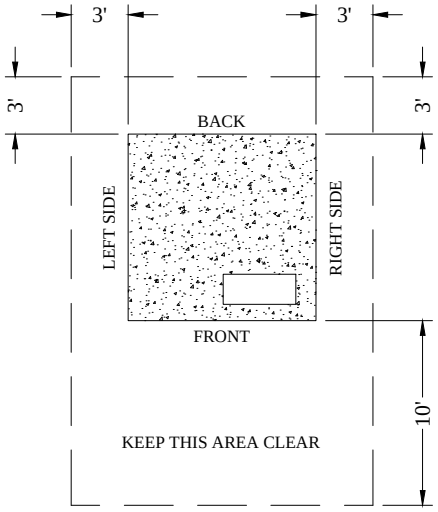

TYPICAL DETAIL 1

NOTE:

A PREFABRICATED OR CONSTRUCTED-ON-SITE CONCRETE PAD SHALL BE USED FOR 100 KVA TRANSFORMER OR LARGER. CONTACT HYRUM CITY ELECTRICAL DEPARTMENT FOR REQUIRED EXACT DIMENSIONS AND APPROVAL.

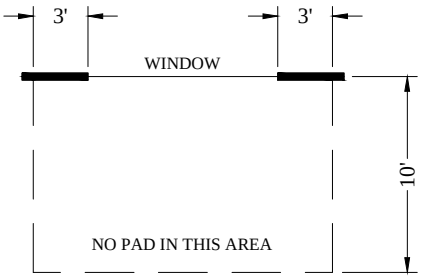

TYPICAL DETAIL 2

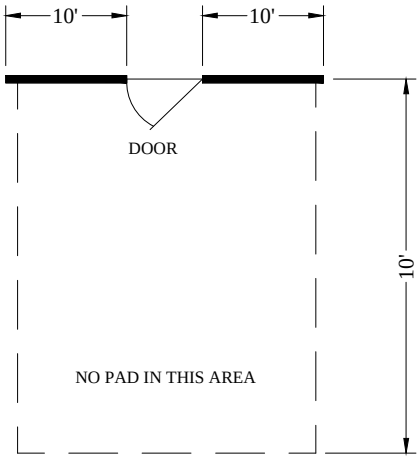

TYPICAL DETAIL 3

CLEARANCE REQUIREMENTS FOR TRANSFORMERS

REV	REVISION RECORD	ENG BY:	APPD BY:	DATE
5				
4				
3				
2				
1				

HYRUM CITY Power & Light

HYRUM CITY ELECTRICAL DEPARTMENT
ELECTRICAL SERVICE REQUIREMENTS

CLEARANCE REQUIREMENTS FOR TRANSFORMERS

SCALE:	INITIAL ISSUE DATE:	SHEET	REV
NOT TO SCALE	01/01/2015	7-15	

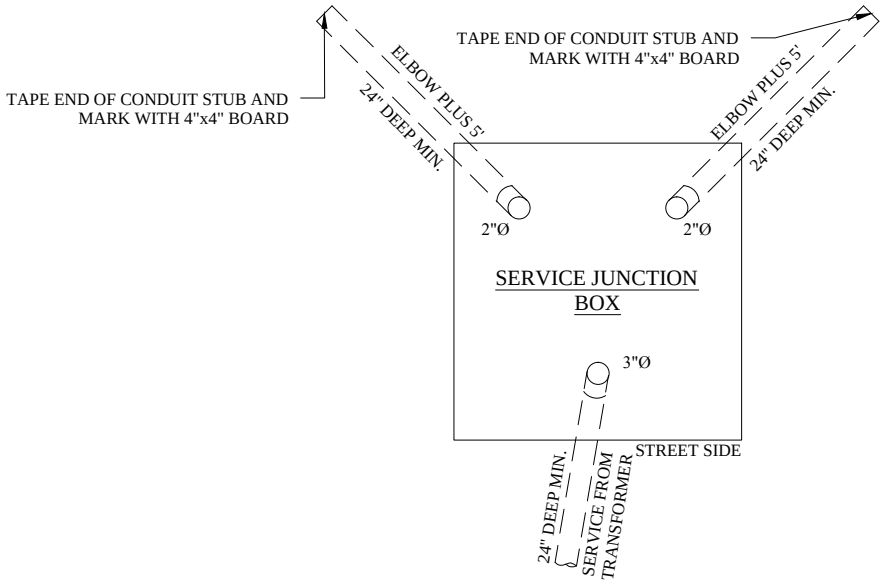

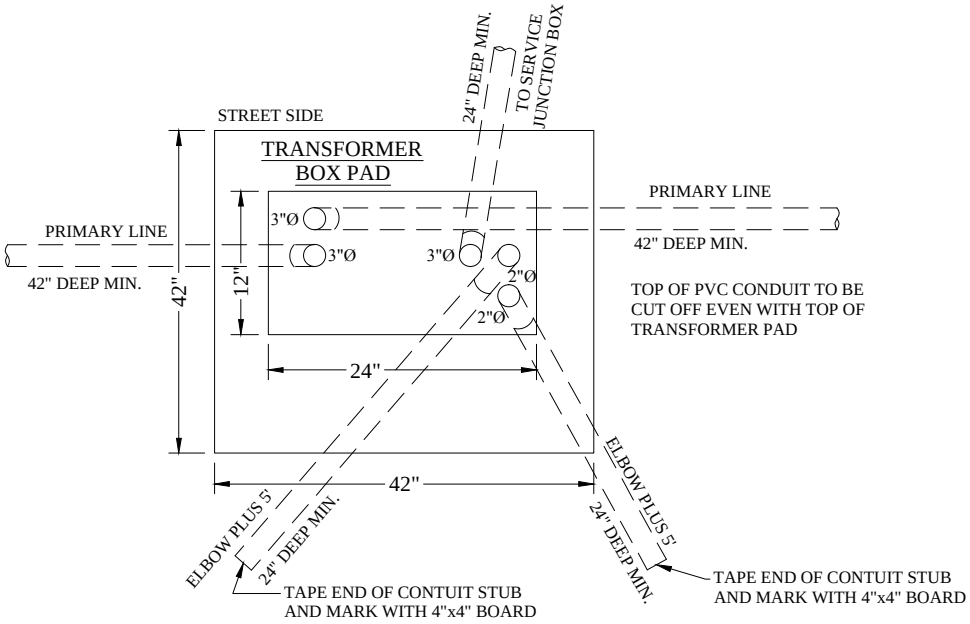

TYPICAL TRANSFORMER AND SERVICE JUNCTION BOX INSTALLATION

REV	REVISION RECORD	ENG BY:	APPD BY:	DATE
5				
4				
3				
2				
1				

HYRUM CITY Power & Light

HYRUM CITY ELECTRICAL DEPARTMENT
ELECTRICAL SERVICE REQUIREMENTS

TYPICAL TRANSFORMER AND SERVICE JUNCTION BOX INSTALLATION

SCALE:	INITIAL ISSUE DATE:	SHEET	REV
NOT TO SCALE	01/01/2015	7-16	

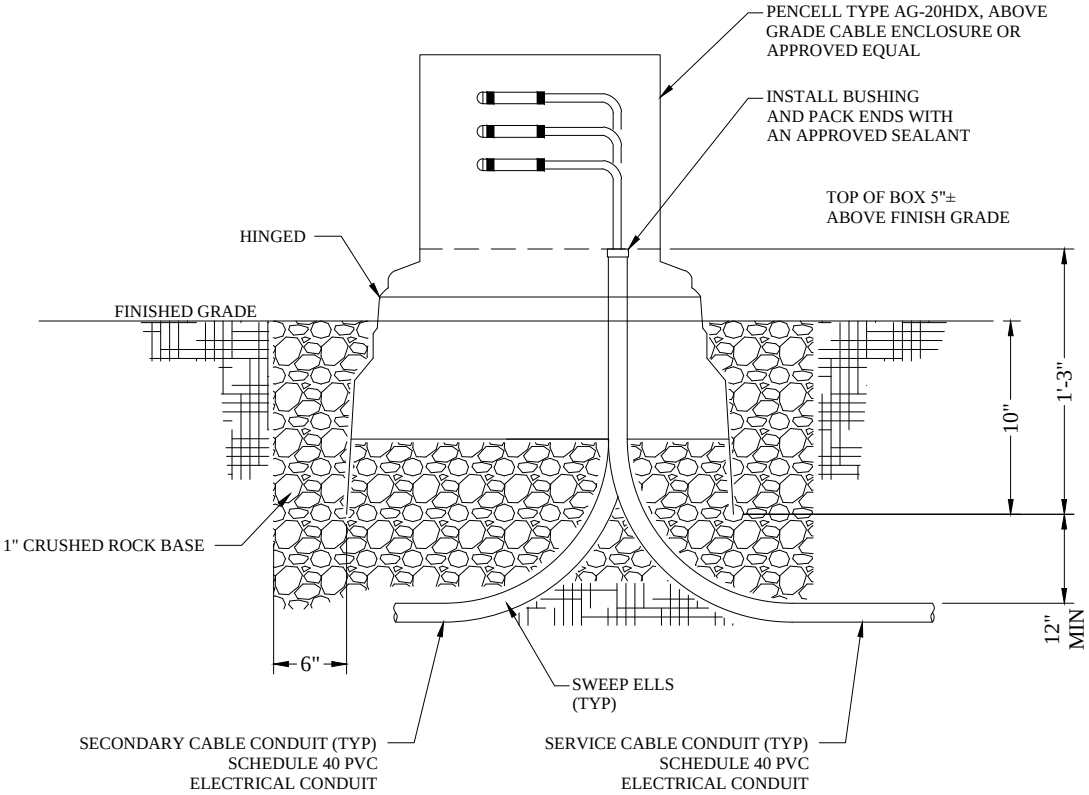

NOTES:

1. AREA AROUND BOX CAN EITHER BE PLANTED, HARD SURFACE OR A COMBINATION.
2. TOP OF BOX:
   ½" ABOVE GRADE FOR LAWN.
   1" ABOVE GRADE FOR GROUND COVER OR SHRUBS.
3. PVC ELECTRICAL CONDUIT CAN BE USED WITH APPROPRIATE GROUNDING WIRE.
4. CRUSHED ROCK SHALL COVER VALVE BOX PIPE OPENINGS TO PREVENT SOIL ENTRY.
5. THE CONTRACTOR SHALL SUBMIT TO THE CITY FOR APPROVAL, PRIOR TO PURCHASE, THE TYPE OF WATERPROOF CONNECTION THAT WILL BE USED.

SECONDARY JUNCTION BOX

REV	REVISION RECORD	ENG BY:	APPD BY:	DATE
5				
4				
3				
2				
1				

HYRUM CITY Power & Light

HYRUM CITY ELECTRICAL DEPARTMENT
ELECTRICAL SERVICE REQUIREMENTS

SECONDARY JUNCTION BOX

SCALE:	INITIAL ISSUE DATE:	SHEET	REV
NOT TO SCALE	01/01/2015	7-17	

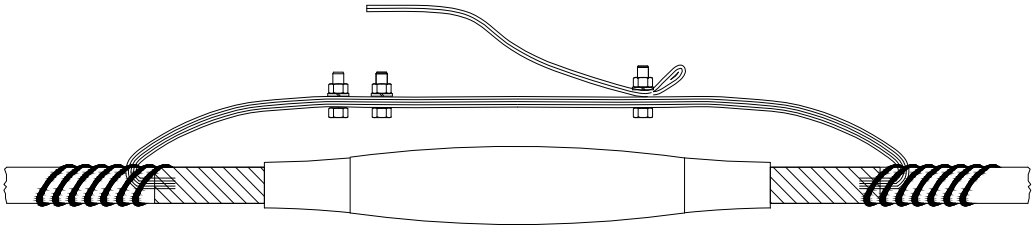

(1) ALL SPLICES AND (OR) JUNCTIONS SHALL BE DONE IN TRANSFORMER OR JUNCTION BOX. NO IN-GROUND REPAIRS UNLESS EXISTING LINE WAS A DIRECT-BURIED LINE.

(2) #6 SOLID BARE COPPER BONDING CONDUCTOR APPROXIMATELY 12" LONG. TELEPHONE COMPANY TO MAKE CONNECTION BETWEEN BONDING CONDUCTOR AND TELEPHONE CABLES.

(3) THIS METHOD OF PROVIDING BONDING PROVISIONS SHALL BE USED ONLY WHEN A SPLICE IS REQUIRED, DUE TO CABLE LENGTH, AT THE LOCATIONS OF THE BONDING PROVISION.

(4) THE PRIMARY CABLE SPLICE SHOWN ABOVE IS A 200 AMP SPLICE BUT THE BASIC CONCEPT FOR PROVIDING BONDING PROVISIONS IS APPLICABLE TO 600 AMP PRIMARY CABLE SPLICES.

BILL OF MATERIAL

ITEM	DESCRIPTION	QUANTITY
1	#6 AWG SOLID, BARE COPPER CONDUCTOR	2 FEET
2	SPLIT BOLT CONNECTOR	1

BONDING CONDUCTOR

REV	REVISION RECORD	ENG BY:	APPD BY:	DATE
5				
4				
3				
2				
1				

HYRUM CITY Power & Light

HYRUM CITY ELECTRICAL DEPARTMENT
ELECTRICAL SERVICE REQUIREMENTS

BONDING CONDUCTOR

SCALE: NOT TO SCALE

INITIAL ISSUE DATE: 01/01/2015

SHEET 7-18

REV

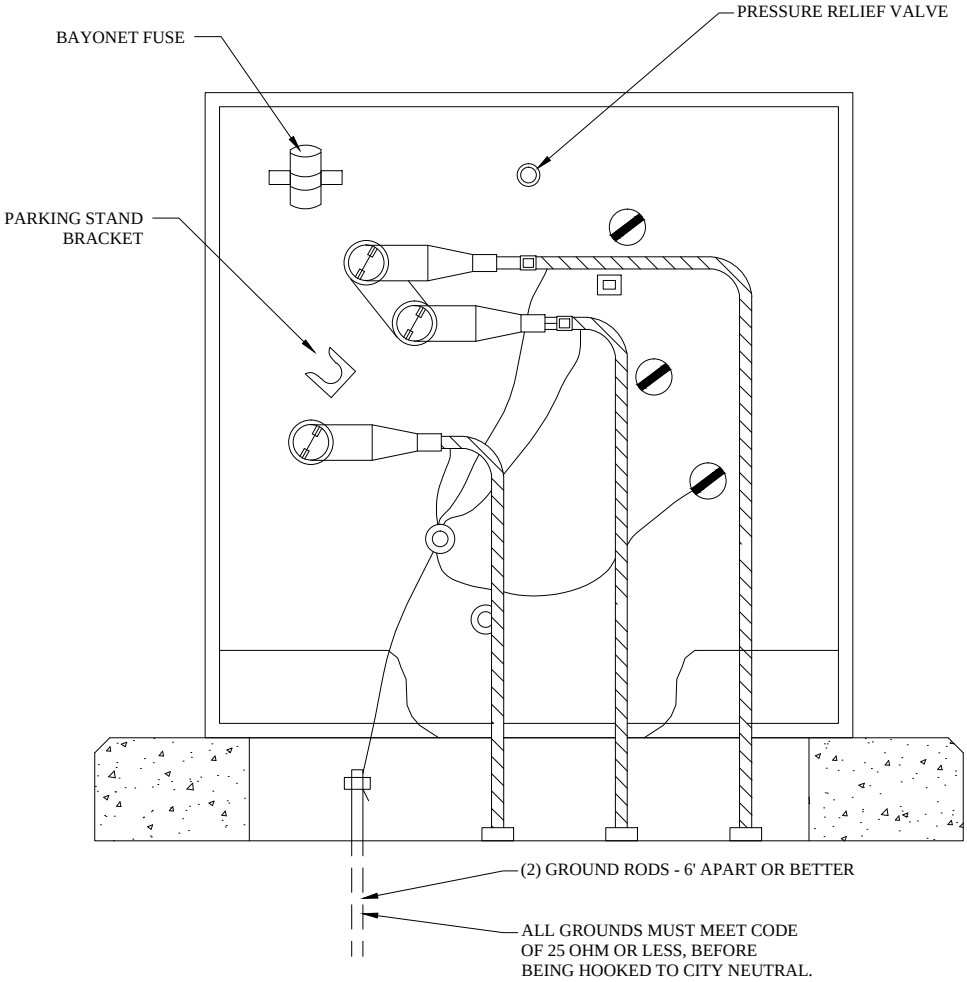

NOTES:

1. CABLE DUCT AND CONDUIT IS TO EXTEND A MINIMUM OF 2" ABOVE GROUND LEVEL IN THE CABLE SLOT.

2. IN GROUNDING THE CONCENTRIC NEUTRAL SLACK IS TO BE ALLOWED FOR OPERATING THE ELBOW CONNECTOR.

3. OMIT THE SECONDARY NEUTRAL GROUND CONNECTION IF A GROUND STRAP IS PRESENT.

4. EACH TRANSFORMER AND PRIMARY JUNCTION SHALL HAVE A PARKING STAND AND COVER ATTACHED TO EACH PARKING STAND BRACKET. PARKING STAND # ELASTIMOLD 16150PBG, PARKING COVER # ELASTIMOLD 160DRGPBG.

5. IN EACH TRANSFORMER AND PRIMARY JUNCTION BOX A FAULT INDICATOR WILL BE INSTALLED ON THE LOAD SIDE OF EACH LOAD BREAK ELBOW.
FAULT INDICATION - COOPER # STLO

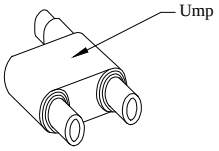

SINGLE-PHASE GROUNDED FRONT PAD-MOUNTED TRANSFORMER WITH SINGLE-PHASE TAP

REV	REVISION RECORD	ENG BY:	APPD BY:	DATE
5				
4				
3				
2				
1				

HYRUM CITY Power & Light

HYRUM CITY ELECTRICAL DEPARTMENT
ELECTRICAL SERVICE REQUIREMENTS

SINGLE-PHASE GROUNDED FRONT PAD-MOUNTED TRANSFORMER WITH SINGLE-PHASE TAP

SCALE:	INITIAL ISSUE DATE:	SHEET	REV
NOT TO SCALE	01/01/2015	7-19	

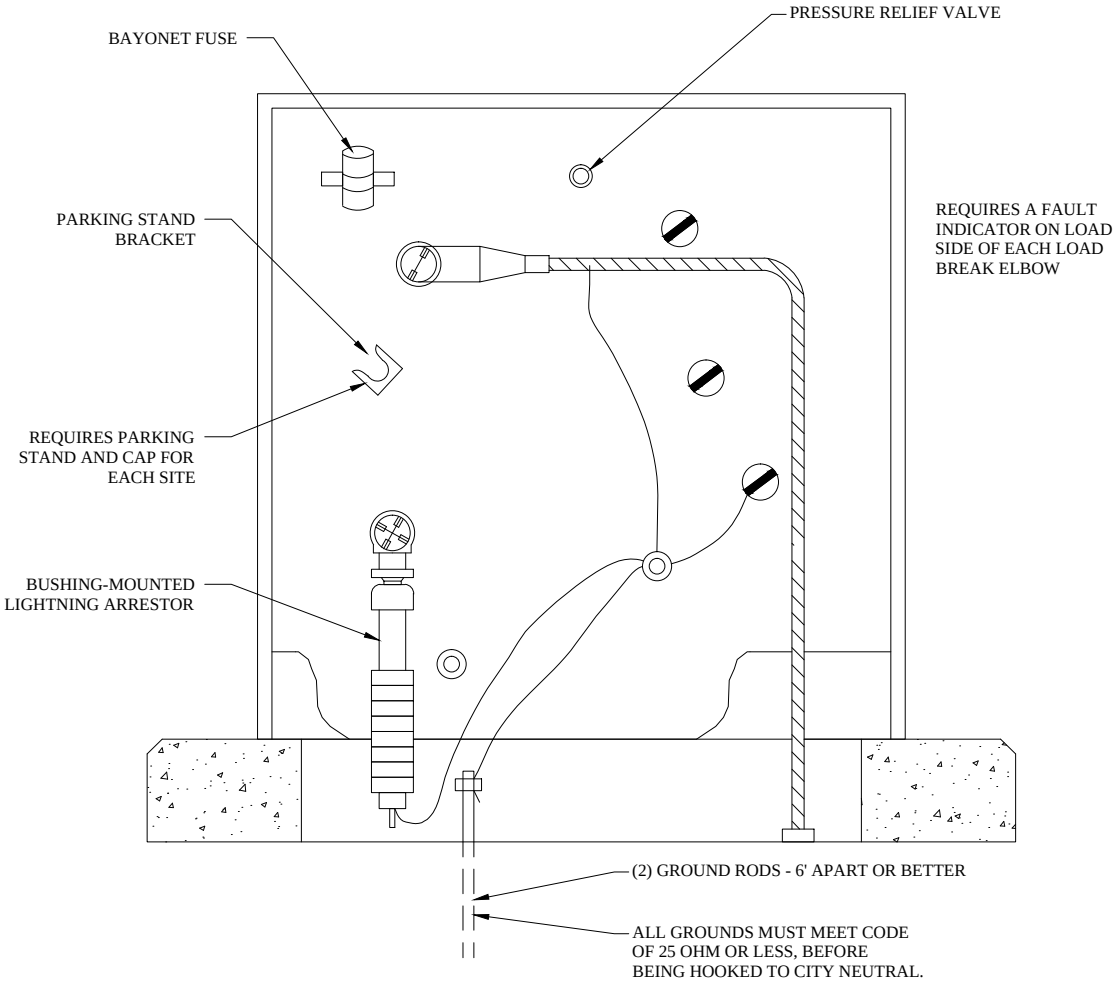

NOTES:

1. THE 10 KV ELBOW ARRESTOR IS UNSHIELDED AND IS TO BE TREATED AS A HOT CONDUCTOR.
2. CABLE DUCT AND CONDUIT IS TO EXTEND A MINIMUM 2" ABOVE GROUND LEVEL IN THE CABLE SLOT.
3. IN GROUNDING THE CONCENTRIC NEUTRAL SLACK IS TO BE ALLOWED FOR OPERATING THE ELBOW CONNECTOR.
4. OMIT THE SECONDARY NEUTRAL GROUND CONNECTION IF A GROUND STRAP IS PRESENT.

BUSHING-MOUNTED LIGHTNING ARRESTOR FOR A GROUNDED-FRONT PAD-MOUNTED TRANSFORMER

REV	REVISION RECORD	ENG BY:	APPD BY:	DATE
5				
4				
3				
2				
1				

HYRUM CITY Power & Light

HYRUM CITY ELECTRICAL DEPARTMENT
ELECTRICAL SERVICE REQUIREMENTS

BUSHING-MOUNTED LIGHTNING ARRESTOR FOR A GROUNDED-FRONT PAD-MOUNTED TRANSFORMER

SCALE:	INITIAL ISSUE DATE:	SHEET	REV
NOT TO SCALE	01/01/2015	7-20	

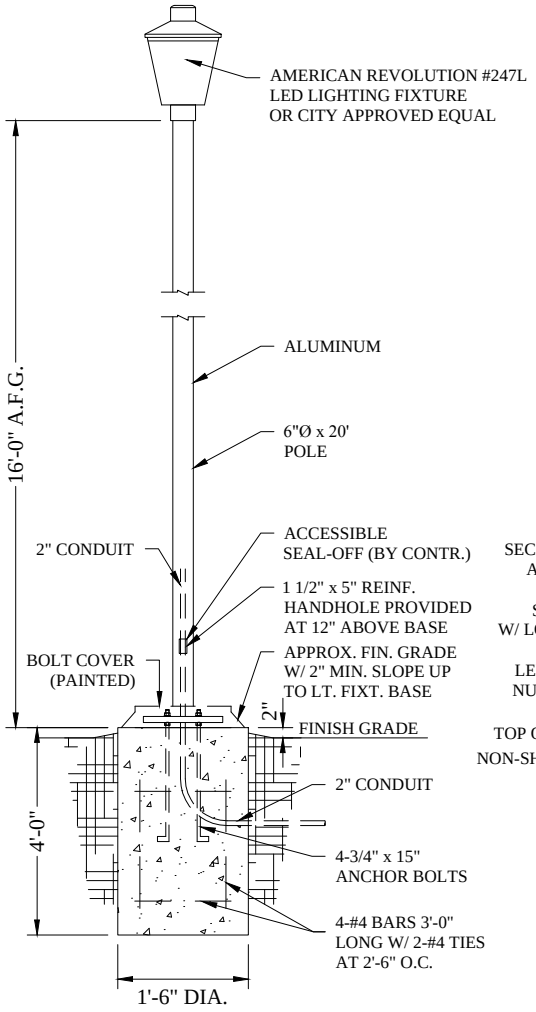

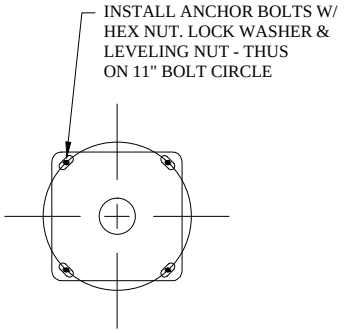

ANCHOR BOLT PLAN
NO SCALE

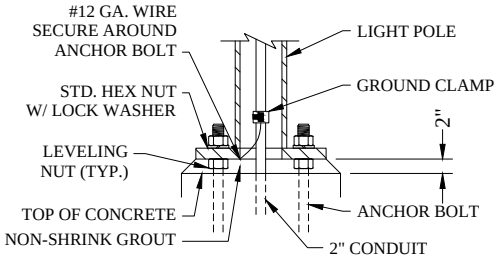

GROUNDING DETAIL
NO SCALE

RESIDENTIAL LIGHT POLE
TYPICAL PLAN AND DETAILS

REV	REVISION RECORD	ENG BY:	APPD BY:	DATE
5				
4				
3				
2				
1				

HYRUM CITY Power & Light

HYRUM CITY ELECTRICAL DEPARTMENT
ELECTRICAL SERVICE REQUIREMENTS

RESIDENTIAL LIGHT POLE
TYPICAL PLAN AND DETAILS

SCALE:	INITIAL ISSUE DATE:	SHEET	REV
NOT TO SCALE	01/01/2015	7-21	

OVERHEAD RESIDENTIAL SERVICES

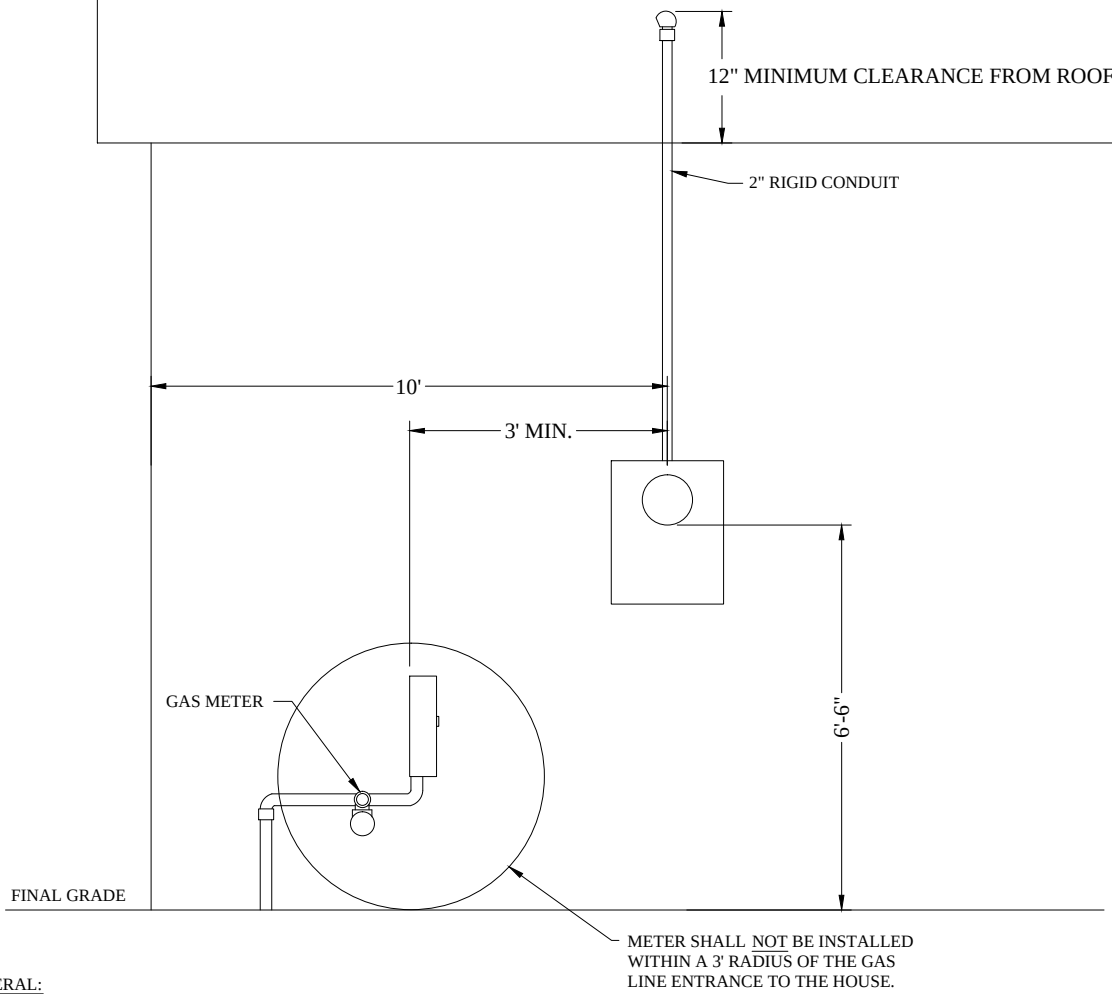

GENERAL:

ALL ELECTRICAL WORK SHALL BE IN COMPLIANCE WITH THE LATEST EDITION OF THE NATIONAL ELECTRIC CODE, INTERNATIONAL BUILDING CODE, ICC ELECTRICAL CODE AND THE NATIONAL ELECTRICAL SAFETY CODE EXCEPT WHERE THESE SPECIFICATIONS ARE MORE STRINGENT. IF THERE IS A CONFLICT BETWEEN STANDARDS, THE MOST STRINGENT SHALL RULE. THE CUSTOMER SHALL PROVIDE ALL SECONDARY SERVICE WIRE FROM THE POINT OF CONNECTION TO THE METER BASE ON UNDERGROUND SERVICES. CUSTOMER SHALL PROVIDE CONDUIT IN PLACE WITH PULLING TAPE PROVIDED IN THE CONDUIT. THE CITY'S ELECTRICAL DEPARTMENT WILL PULL THE SECONDARY SERVICE WIRE.

INSTALLATION:

A. VOLTAGE CABLES: ALL PRIMARY VOLTAGE CABLES SHALL BE BURIED 42 INCHES DEEP FROM FINISH GRADE. ALL SECONDARY VOLTAGE CABLES SHALL BE BURIED 24 INCHES DEEP FROM FINISH GRADE EXCEPT WHEN THEY CROSS STREETS, IN WHICH CASE THEY SHALL BE BURIED 42 INCHES DEEP FROM FINISH GRADE. ALL CABLE SHALL BE INSTALLED IN NOT LESS THAN SCHEDULE 40 CONDUIT, 3 INCHES IN DIAMETER OR LARGER, DEPENDING ON THE CABLE SIZE AND DISTANCE. PULLING TAPE SHALL BE PROVIDED IN THE CONDUIT AND THE CITY'S ELECTRICAL DEPARTMENT WILL PULL THE CABLE.

B. CONDUIT: ALL CONDUIT SHALL BE EMBEDDED IN SAND EXCEPT AT STREET CROSSINGS. THE SAND SHALL EXTEND A MINIMUM OF 2 INCHES BELOW AND 4 INCHES ABOVE THE CONDUIT. ALL CABLE CROSSING STREETS SHALL BE ENCLOSED IN AN APPROPRIATE DIAMETER CONDUIT ENCASED IN CONCRETE FOR A MINIMUM DEPTH OF 4 INCHES ON ALL SIDES, TOP AND BOTTOM OF THE CONDUIT. HYRUM CITY PROVIDES ALL SERVICE WIRE TO THE METER MAST ON OVERHEAD CONNECTIONS. THE CONTRACTOR SHALL PROVIDE ALL SECONDARY SERVICE WIRE FROM THE POINT OF CONNECTION TO THE METER BASE ON ALL UNDERGROUND SERVICE. CUSTOMER SHALL PROVIDE CONDUIT IN PLACE WITH PULLING TAPE PROVIDED IN THE CONDUIT. THE CITY'S ELECTRICAL DEPARTMENT WILL PULL THE SECONDARY SERVICE WIRE.

C. JUNCTION BOXES: PRIMARY AND SECONDARY JUNCTION BOXES SHALL BE PLACED SO AS TO AVOID BEING FILLED WITH DRAINAGE WATER.

D. BOX PADS: BOX PADS SHALL BE PLACED ON WELL COMPACTED AND LEVEL GROUND. THE TOP OF THE TRANSFORMER PAD SHALL BE AT LEAST 2 INCHES ABOVE THE SIDEWALK. TWO GROUND RODS 5/8" DIAMETER x 8 FEET LONG SHALL BE DRIVEN AT EACH TRANSFORMER AT 5 FEET CENTER TO CENTER AND ONE AT EACH PRIMARY JUNCTION POINT. ALL CONCENTRIC NEUTRALS SHALL BE CONNECTED AND COMMONLY GROUNDED TO THE DRIVEN ROD.

REV	REVISION RECORD	ENG BY:	APPD BY:	DATE
5				
4				
3				
2				
1				

HYRUM CITY Power & Light

HYRUM CITY ELECTRICAL DEPARTMENT
ELECTRICAL SERVICE REQUIREMENTS

OVERHEAD RESIDENTIAL SERVICES

SCALE:	INITIAL ISSUE DATE:	SHEET	REV
NOT TO SCALE	01/01/2015	7-22	

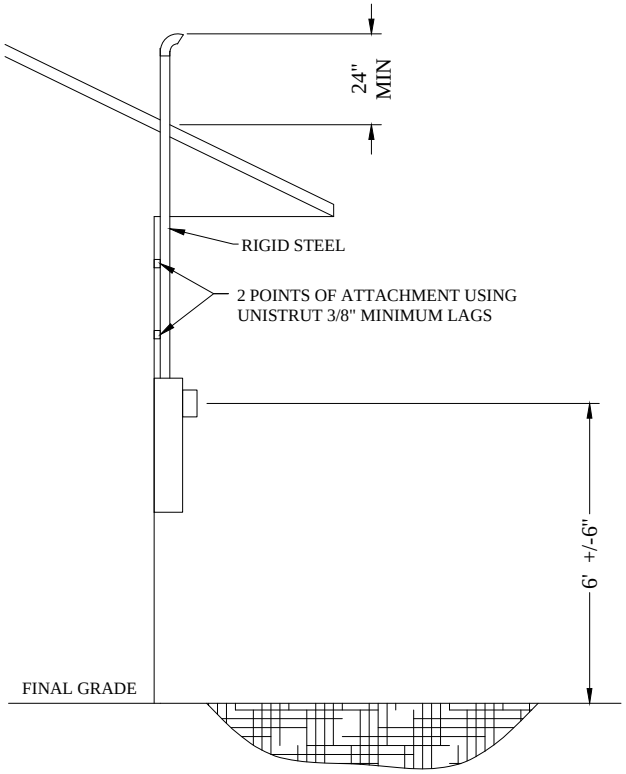

***METAL CONDUIT BELOW GRADE SHALL BE SUITABLY COVERED WITH CORROSION PROTECTIVE TAPE.**

***RIGID CONDUIT STAND PIPE SHALL BE 2" OR 2 ½" DEPENDING ON THE SIZE OF THE SERVICE.**

GENERAL:

ALL ELECTRICAL WORK SHALL BE IN COMPLIANCE WITH THE LATEST EDITION OF THE NATIONAL ELECTRIC CODE, INTERNATIONAL BUILDING CODE, ICC ELECTRICAL CODE AND THE NATIONAL ELECTRICAL SAFETY CODE EXCEPT WHERE THESE SPECIFICATIONS ARE MORE STRINGENT. IF THERE IS A CONFLICT BETWEEN STANDARDS, THE MOST STRINGENT SHALL RULE. THE CUSTOMER SHALL PROVIDE ALL SECONDARY SERVICE WIRE FROM THE POINT OF CONNECTION TO THE METER BASE ON UNDERGROUND SERVICES. CUSTOMER SHALL PROVIDE CONDUIT IN PLACE WITH PULLING TAPE PROVIDED IN THE CONDUIT. THE CITY'S ELECTRICAL DEPARTMENT WILL PULL THE SECONDARY SERVICE WIRE.

INSTALLATION:

A. VOLTAGE CABLES: ALL PRIMARY VOLTAGE CABLES SHALL BE BURIED 42 INCHES DEEP FROM FINISH GRADE. ALL SECONDARY VOLTAGE CABLES SHALL BE BURIED 24 INCHES DEEP FROM FINISH GRADE EXCEPT WHEN THEY CROSS STREETS, IN WHICH CASE THEY SHALL BE BURIED 42 INCHES DEEP FROM FINISH GRADE. ALL CABLE SHALL BE INSTALLED IN NOT LESS THAN SCHEDULE 40 CONDUIT, 3 INCHES IN DIAMETER OR LARGER, DEPENDING ON THE CABLE SIZE AND DISTANCE. PULLING TAPE SHALL BE PROVIDED IN THE CONDUIT AND THE CITY'S ELECTRICAL DEPARTMENT WILL PULL THE CABLE.

B. CONDUIT: ALL CONDUIT SHALL BE EMBEDDED IN SAND EXCEPT AT STREET CROSSINGS. THE SAND SHALL EXTEND A MINIMUM OF 2 INCHES BELOW AND 4 INCHES ABOVE THE CONDUIT. ALL CABLE CROSSING STREETS SHALL BE ENCLOSED IN AN APPROPRIATE DIAMETER CONDUIT ENCASED IN CONCRETE FOR A MINIMUM DEPTH OF 4 INCHES ON ALL SIDES, TOP AND BOTTOM OF THE CONDUIT. HYRUM CITY PROVIDES ALL SERVICE WIRE TO THE METER MAST ON OVERHEAD CONNECTIONS. THE CONTRACTOR SHALL PROVIDE ALL SECONDARY SERVICE WIRE FROM THE POINT OF CONNECTION TO THE METER BASE ON ALL UNDERGROUND SERVICE. CUSTOMER SHALL PROVIDE CONDUIT IN PLACE WITH PULLING TAPE PROVIDED IN THE CONDUIT. THE CITY'S ELECTRICAL DEPARTMENT WILL PULL THE SECONDARY SERVICE WIRE.

C. JUNCTION BOXES: PRIMARY AND SECONDARY JUNCTION BOXES SHALL BE PLACED SO AS TO AVOID BEING FILLED WITH DRAINAGE WATER.

D. BOX PADS: BOX PADS SHALL BE PLACED ON WELL COMPACTED AND LEVEL GROUND. THE TOP OF THE TRANSFORMER PAD SHALL BE AT LEAST 2 INCHES ABOVE THE SIDEWALK. TWO GROUND RODS 5/8" DIAMETER x 8 FEET LONG SHALL BE DRIVEN AT EACH TRANSFORMER AT 5 FEET CENTER TO CENTER AND ONE AT EACH PRIMARY JUNCTION POINT. ALL CONCENTRIC NEUTRALS SHALL BE CONNECTED AND COMMONLY GROUNDED TO THE DRIVEN ROD.

OVERHEAD RESIDENTIAL SERVICES

REV	REVISION RECORD	ENG BY:	APPD BY:	DATE
5				
4				
3				
2				
1				

HYRUM CITY Power & Light

HYRUM CITY ELECTRICAL DEPARTMENT
ELECTRICAL SERVICE REQUIREMENTS

OVERHEAD RESIDENTIAL SERVICES

SCALE:	INITIAL ISSUE DATE:	SHEET	REV
NOT TO SCALE	01/01/2015	7-23	

GENERAL:

ALL ELECTRICAL WORK SHALL BE IN COMPLIANCE WITH THE LATEST EDITION OF THE NATIONAL ELECTRIC CODE, INTERNATIONAL BUILDING CODE, ICC ELECTRICAL CODE AND THE NATIONAL ELECTRICAL SAFETY CODE EXCEPT WHERE THESE SPECIFICATIONS ARE MORE STRINGENT. IF THERE IS A CONFLICT BETWEEN STANDARDS, THE MOST STRINGENT SHALL RULE. THE CUSTOMER SHALL PROVIDE ALL SECONDARY SERVICE WIRE FROM THE POINT OF CONNECTION TO THE METER BASE ON UNDERGROUND SERVICES. CUSTOMER SHALL PROVIDE CONDUIT IN PLACE WITH PULLING TAPE PROVIDED IN THE CONDUIT. THE CITY'S ELECTRICAL DEPARTMENT WILL PULL THE SECONDARY SERVICE WIRE.

INSTALLATION:

A. VOLTAGE CABLES: ALL PRIMARY VOLTAGE CABLES SHALL BE BURIED 42 INCHES DEEP FROM FINISH GRADE. ALL SECONDARY VOLTAGE CABLES SHALL BE BURIED 24 INCHES DEEP FROM FINISH GRADE EXCEPT WHEN THEY CROSS STREETS, IN WHICH CASE THEY SHALL BE BURIED 42 INCHES DEEP FROM FINISH GRADE. ALL CABLE SHALL BE INSTALLED IN NOT LESS THAN SCHEDULE 40 CONDUIT, 3 INCHES IN DIAMETER OR LARGER, DEPENDING ON THE CABLE SIZE AND DISTANCE. PULLING TAPE SHALL BE PROVIDED IN THE CONDUIT AND THE CITY'S ELECTRICAL DEPARTMENT WILL PULL THE CABLE.

B. CONDUIT: ALL CONDUIT SHALL BE EMBEDDED IN SAND EXCEPT AT STREET CROSSINGS. THE SAND SHALL EXTEND A MINIMUM OF 2 INCHES BELOW AND 4 INCHES ABOVE THE CONDUIT. ALL CABLE CROSSING STREETS SHALL BE ENCLOSED IN AN APPROPRIATE DIAMETER CONDUIT ENCASED IN CONCRETE FOR A MINIMUM DEPTH OF 4 INCHES ON ALL SIDES, TOP AND BOTTOM OF THE CONDUIT. HYRUM CITY PROVIDES ALL SERVICE WIRE TO THE METER MAST ON OVERHEAD CONNECTIONS. THE CONTRACTOR SHALL PROVIDE ALL SECONDARY SERVICE WIRE FROM THE POINT OF CONNECTION TO THE METER BASE ON ALL UNDERGROUND SERVICE. CUSTOMER SHALL PROVIDE CONDUIT IN PLACE WITH PULLING TAPE PROVIDED IN THE CONDUIT. THE CITY'S ELECTRICAL DEPARTMENT WILL PULL THE SECONDARY SERVICE WIRE.

C. JUNCTION BOXES: PRIMARY AND SECONDARY JUNCTION BOXES SHALL BE PLACED SO AS TO AVOID BEING FILLED WITH DRAINAGE WATER.

D. BOX PADS: BOX PADS SHALL BE PLACED ON WELL COMPACTED AND LEVEL GROUND. THE TOP OF THE TRANSFORMER PAD SHALL BE AT LEAST 2 INCHES ABOVE THE SIDEWALK. TWO GROUND RODS 5/8" DIAMETER x 8 FEET LONG SHALL BE DRIVEN AT EACH TRANSFORMER AT 5 FEET CENTER TO CENTER AND ONE AT EACH PRIMARY JUNCTION POINT. ALL CONCENTRIC NEUTRALS SHALL BE CONNECTED AND COMMONLY GROUNDED TO THE DRIVEN ROD.

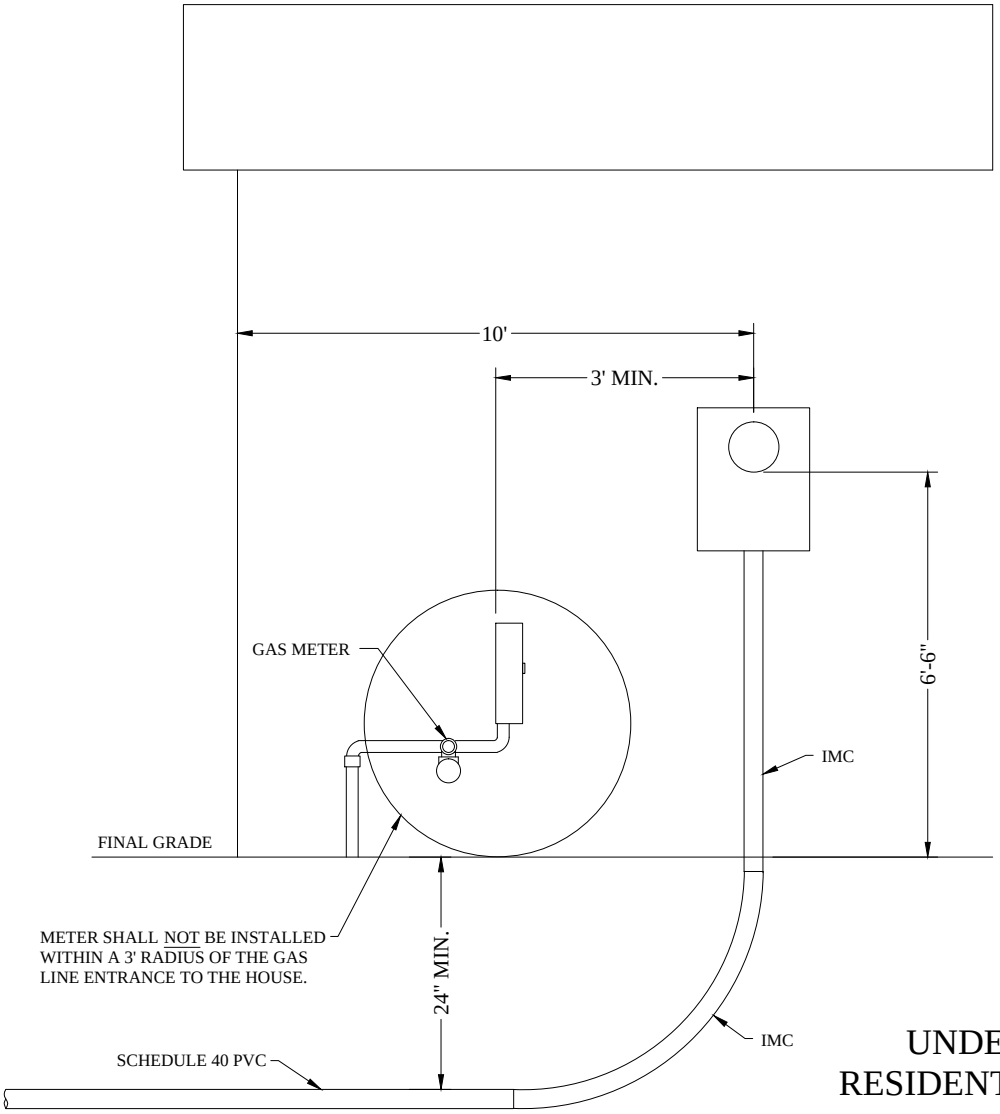

UNDERGROUND RESIDENTIAL SERVICES

REV	REVISION RECORD	ENG BY:	APPD BY:	DATE
5				
4				
3				
2				
1				

HYRUM CITY Power & Light

HYRUM CITY ELECTRICAL DEPARTMENT
ELECTRICAL SERVICE REQUIREMENTS

UNDERGROUND RESIDENTIAL SERVICES

SCALE:	INITIAL ISSUE DATE:	SHEET	REV
NOT TO SCALE	01/01/2015	7-24	

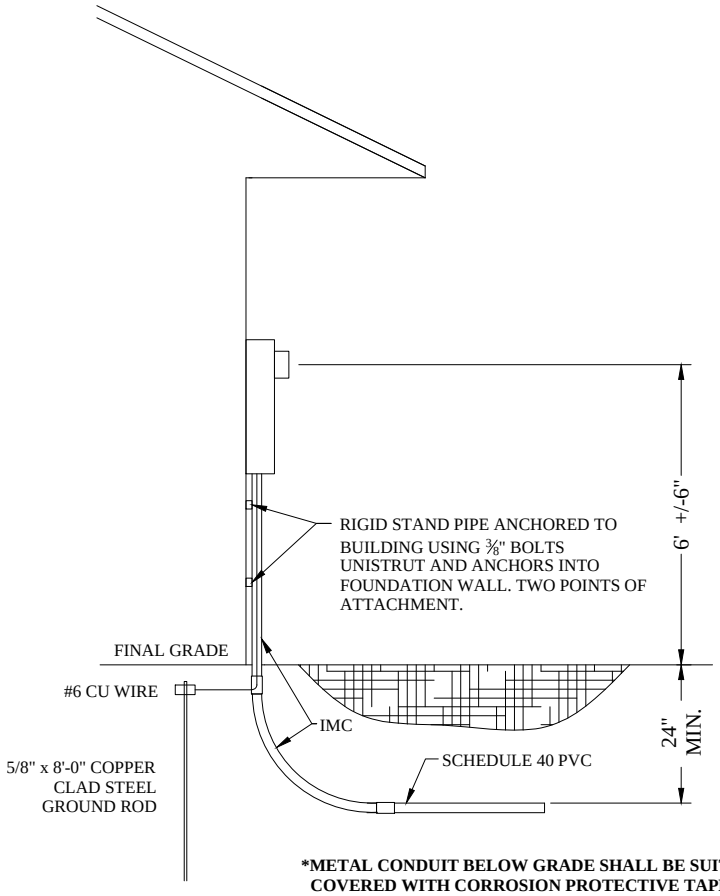

***METAL CONDUIT BELOW GRADE SHALL BE SUITABLY COVERED WITH CORROSION PROTECTIVE TAPE.**

***RIGID CONDUIT STAND PIPE SHALL BE 2" OR 2 ½" DEPENDING ON THE SIZE OF THE SERVICE.**

GENERAL:

ALL ELECTRICAL WORK SHALL BE IN COMPLIANCE WITH THE LATEST EDITION OF THE NATIONAL ELECTRIC CODE, INTERNATIONAL BUILDING CODE, ICC ELECTRICAL CODE AND THE NATIONAL ELECTRICAL SAFETY CODE EXCEPT WHERE THESE SPECIFICATIONS ARE MORE STRINGENT. IF THERE IS A CONFLICT BETWEEN STANDARDS, THE MOST STRINGENT SHALL RULE. THE CUSTOMER SHALL PROVIDE ALL SECONDARY SERVICE WIRE FROM THE POINT OF CONNECTION TO THE METER BASE ON UNDERGROUND SERVICES. CUSTOMER SHALL PROVIDE CONDUIT IN PLACE WITH PULLING TAPE PROVIDED IN THE CONDUIT. THE CITY'S ELECTRICAL DEPARTMENT WILL PULL THE SECONDARY SERVICE WIRE.

INSTALLATION:

A. VOLTAGE CABLES: ALL PRIMARY VOLTAGE CABLES SHALL BE BURIED 42 INCHES DEEP FROM FINISH GRADE. ALL SECONDARY VOLTAGE CABLES SHALL BE BURIED 24 INCHES DEEP FROM FINISH GRADE EXCEPT WHEN THEY CROSS STREETS, IN WHICH CASE THEY SHALL BE BURIED 42 INCHES DEEP FROM FINISH GRADE. ALL CABLE SHALL BE INSTALLED IN NOT LESS THAN SCHEDULE 40 CONDUIT, 3 INCHES IN DIAMETER OR LARGER, DEPENDING ON THE CABLE SIZE AND DISTANCE. PULLING TAPE SHALL BE PROVIDED IN THE CONDUIT AND THE CITY'S ELECTRICAL DEPARTMENT WILL PULL THE CABLE.

B. CONDUIT: ALL CONDUIT SHALL BE EMBEDDED IN SAND EXCEPT AT STREET CROSSINGS. THE SAND SHALL EXTEND A MINIMUM OF 2 INCHES BELOW AND 4 INCHES ABOVE THE CONDUIT. ALL CABLE CROSSING STREETS SHALL BE ENCLOSED IN AN APPROPRIATE DIAMETER CONDUIT ENCASED IN CONCRETE FOR A MINIMUM DEPTH OF 4 INCHES ON ALL SIDES, TOP AND BOTTOM OF THE CONDUIT. HYRUM CITY PROVIDES ALL SERVICE WIRE TO THE METER MAST ON OVERHEAD CONNECTIONS. THE CONTRACTOR SHALL PROVIDE ALL SECONDARY SERVICE WIRE FROM THE POINT OF CONNECTION TO THE METER BASE ON ALL UNDERGROUND SERVICE. CUSTOMER SHALL PROVIDE CONDUIT IN PLACE WITH PULLING TAPE PROVIDED IN THE CONDUIT. THE CITY'S ELECTRICAL DEPARTMENT WILL PULL THE SECONDARY SERVICE WIRE.

C. JUNCTION BOXES: PRIMARY AND SECONDARY JUNCTION BOXES SHALL BE PLACED SO AS TO AVOID BEING FILLED WITH DRAINAGE WATER.

D. BOX PADS: BOX PADS SHALL BE PLACED ON WELL COMPACTED AND LEVEL GROUND. THE TOP OF THE TRANSFORMER PAD SHALL BE AT LEAST 2 INCHES ABOVE THE SIDEWALK. TWO GROUND RODS 5/8" DIAMETER x 8 FEET LONG SHALL BE DRIVEN AT EACH TRANSFORMER AT 5 FEET CENTER TO CENTER AND ONE AT EACH PRIMARY JUNCTION POINT. ALL CONCENTRIC NEUTRALS SHALL BE CONNECTED AND COMMONLY GROUNDED TO THE DRIVEN ROD.

UNDERGROUND RESIDENTIAL SERVICES

REV	REVISION RECORD	ENG BY:	APPD BY:	DATE
5				
4				
3				
2				
1				

HYRUM CITY Power & Light

HYRUM CITY ELECTRICAL DEPARTMENT
ELECTRICAL SERVICE REQUIREMENTS

UNDERGROUND RESIDENTIAL SERVICES

SCALE:	INITIAL ISSUE DATE:	SHEET	REV
NOT TO SCALE	01/01/2015	7-25	

STANDARD DETAIL DRAWINGS

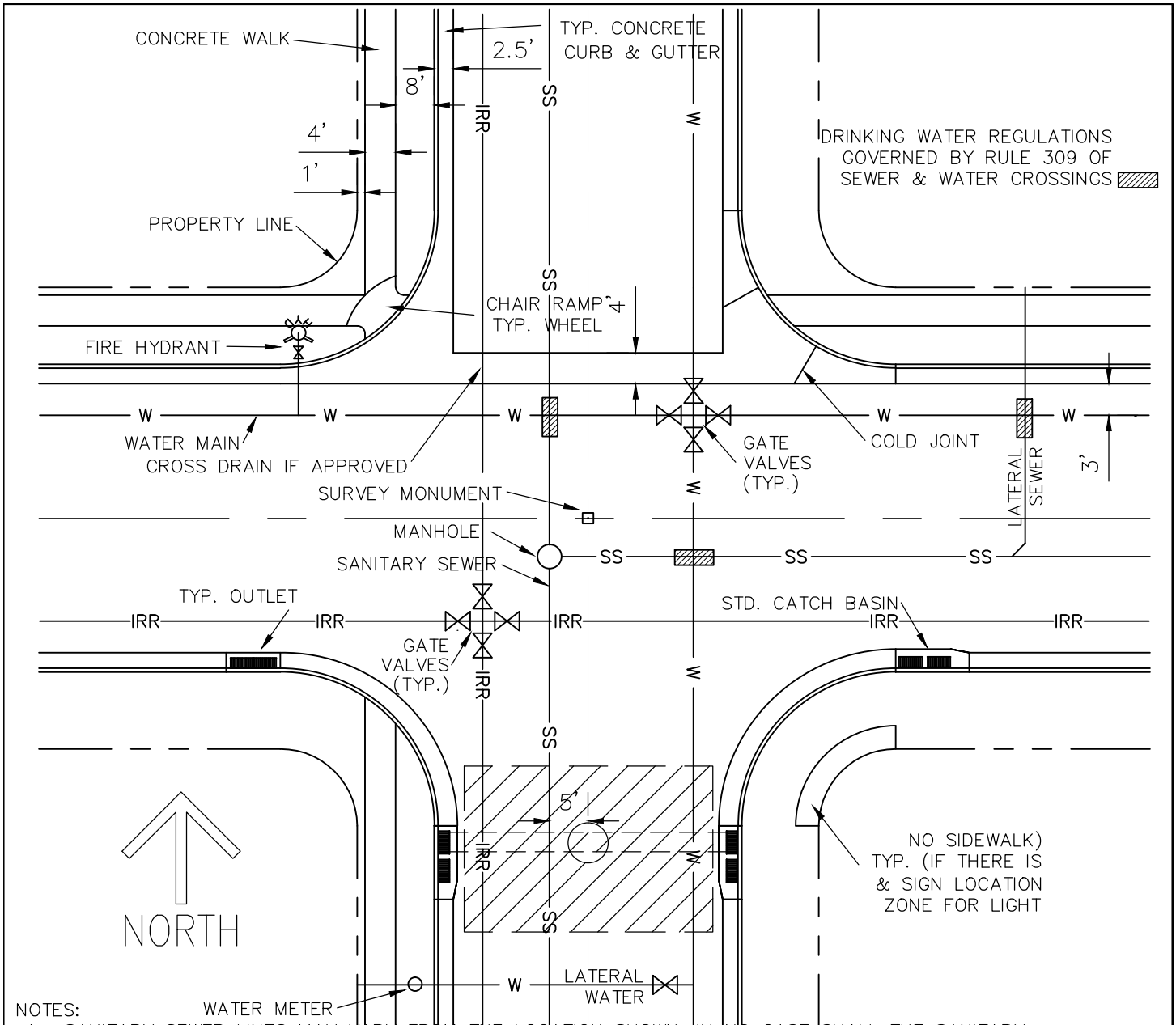

NOTES:

1. SANITARY SEWER LINES MAY VARY FROM THE LOCATION SHOWN. IN NO CASE SHALL THE SANITARY SEWER OR LATERAL BE LAID LESS THAN 10 FEET FROM A PARALLELING POTABLE WATER LINE (INCLUDING SERVICE LINES). ALL SEWER LINES AND MANHOLES SHALL BE INSTALLED AT A MINIMUM OF 4 FEET FROM THE EDGE OF ALL CURBS AND GUTTERS WHEREVER POSSIBLE. SANITARY SEWER LINES SHALL BE INSTALLED ON THE WEST AND SOUTH SIDE OF STREET.

2. WHEN A SANITARY SEWER AND A WATER LINE CROSS, THE TOP OF THE SANITARY SEWER SHALL BE NO LESS THAN 18 INCHES BELOW THE BOTTOM OF THE WATER LINE. SEE RULE 309-211 OF UTAH'S PUBLIC DRINKING WATER REGULATIONS.

3. WATER VALVES AND FIRE HYDRANTS SHALL BE LOCATED AS APPROVED BY THE CITY (5 FOOT MINIMUM SEPARATION BETWEEN WATER LINE AND ANY OTHER UTILITY).

4. NO POTABLE WATER LINE SMALLER THAN 8 INCH DIAMETER SHALL BE INSTALLED WITHOUT APPROVAL OF THE CITY. NO WATER CONNECTION SHALL BE MADE WITHOUT APPROVAL OF THE CITY.

5. NO PRESSURE IRRIGATION MAIN SMALLER THAN 6 INCH DIAMETER SHALL BE INSTALLED.

6. CURB AND GUTTER ON BOTH SIDES OF THE STREET WILL BE REQUIRED BY THE CITY.

7. SIDEWALK ON BOTH SIDES OF THE STREET WILL BE REQUIRED BY THE CITY.

4-106

TYPICAL INTERSECTION LOCATIONS FOR UTILITIES

REV. 04-07

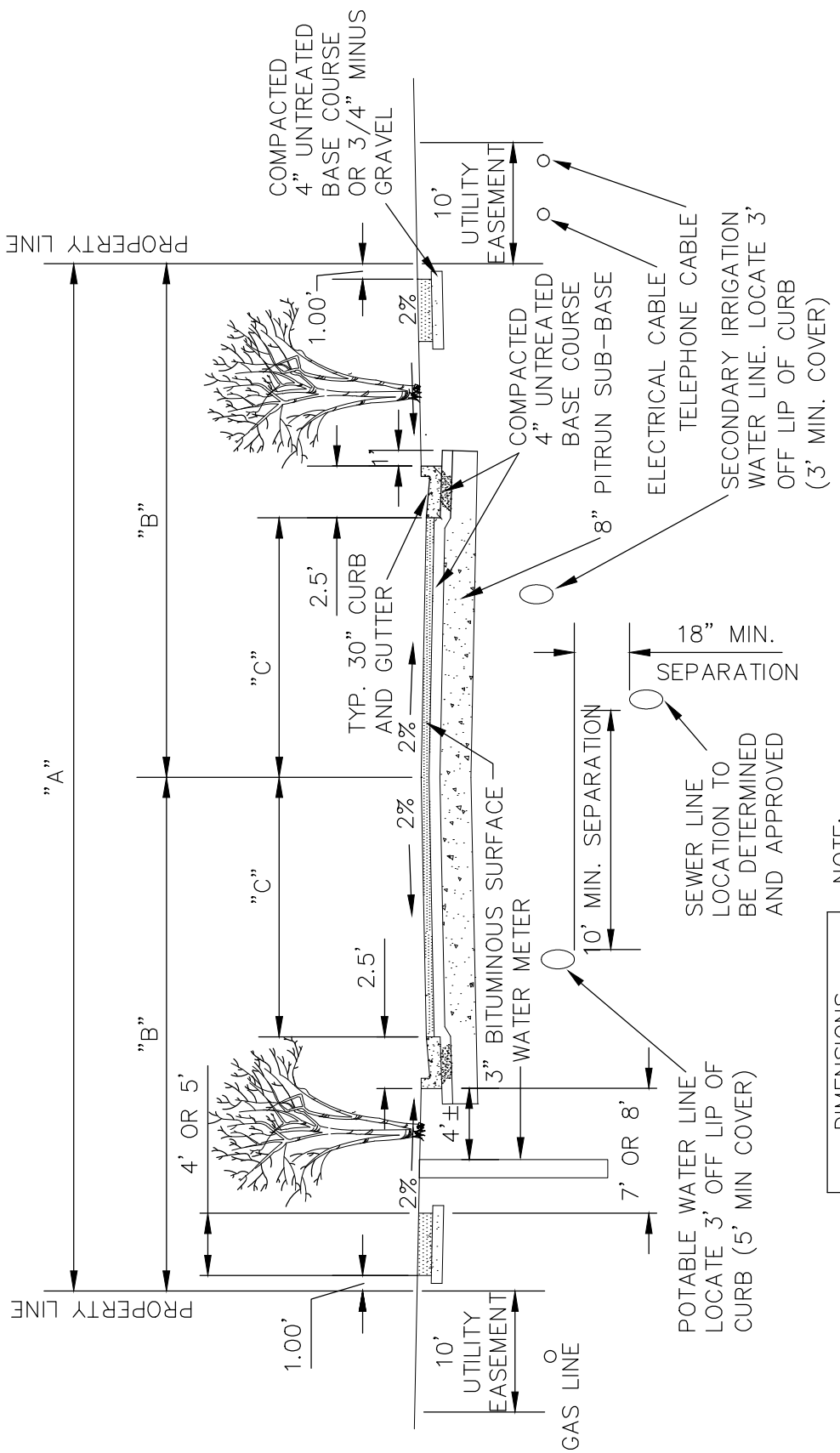

DIMENSIONS		
"A"	"B"	"C"
68.00'	34.00'	18.50'
99.00'	49.50'	33.00'

NOTE:
WIDTH OF SIDEWALK SHALL BE 5 FEET ON 99 FOOT WIDE STREET

TYPICAL STREET CROSS SECTION FOR NEW CONSTRUCTION WITH CURB & GUTTER

4–107

TYPICAL STREET CROSS SECTION

REV. 07–08

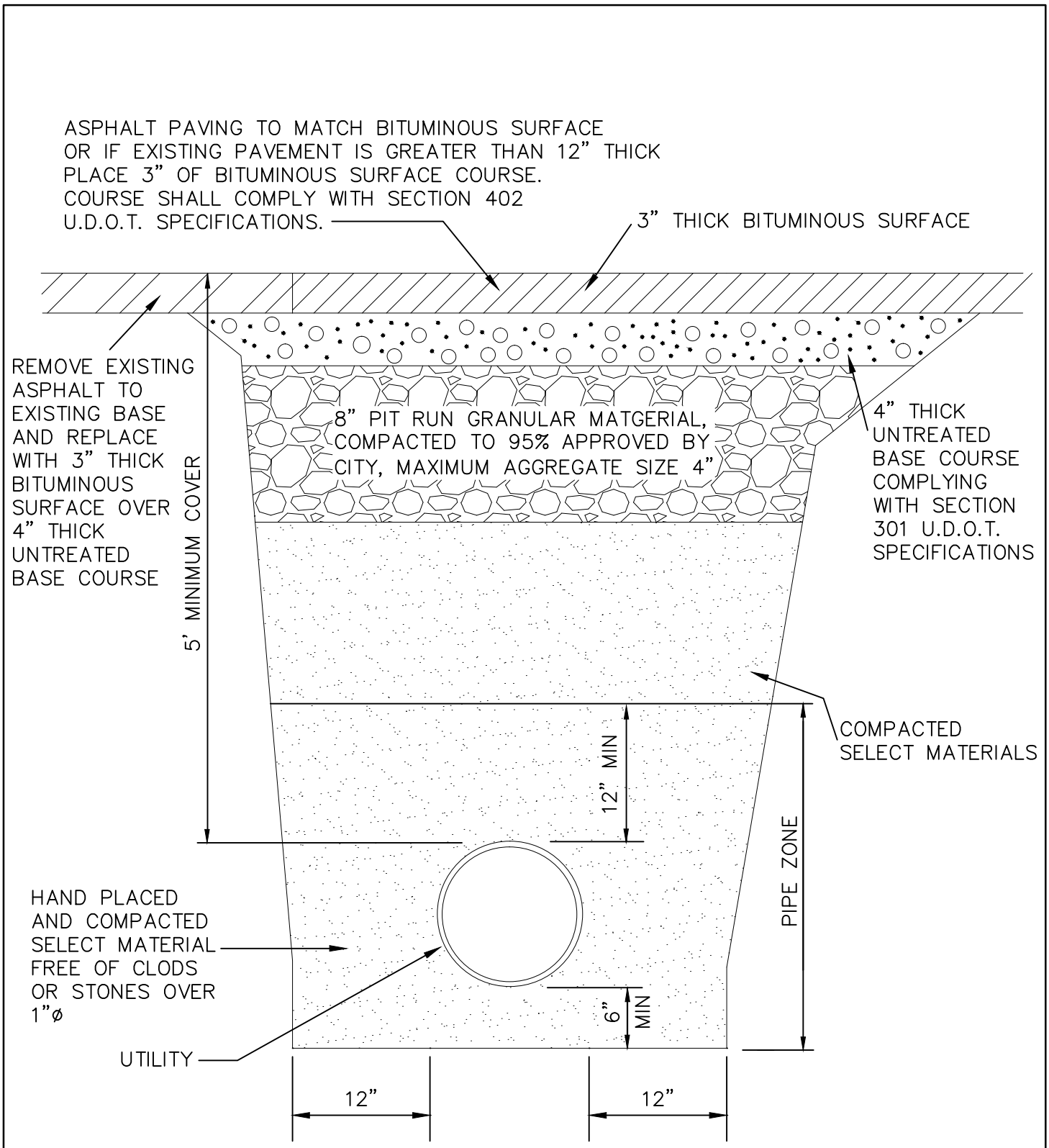

LOCATED IN SURFACED ROAD

4–108

UTILITY TRENCH

REV. JAN 03

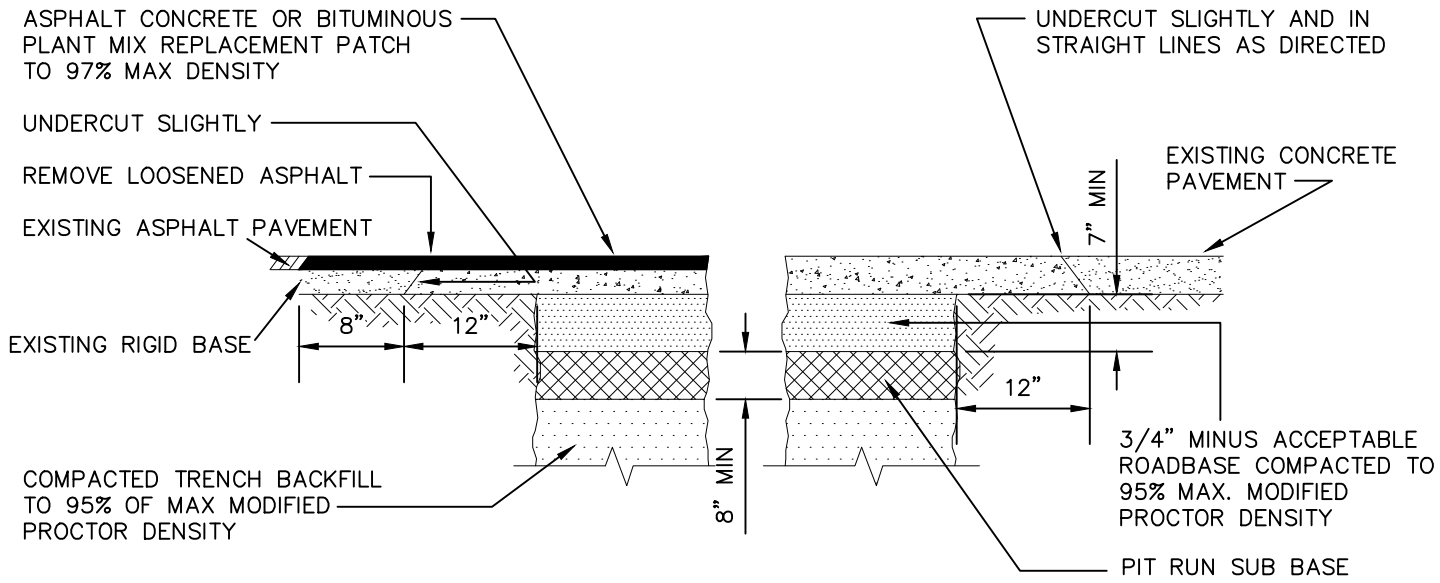

RIGID PAVEMENT PATCH

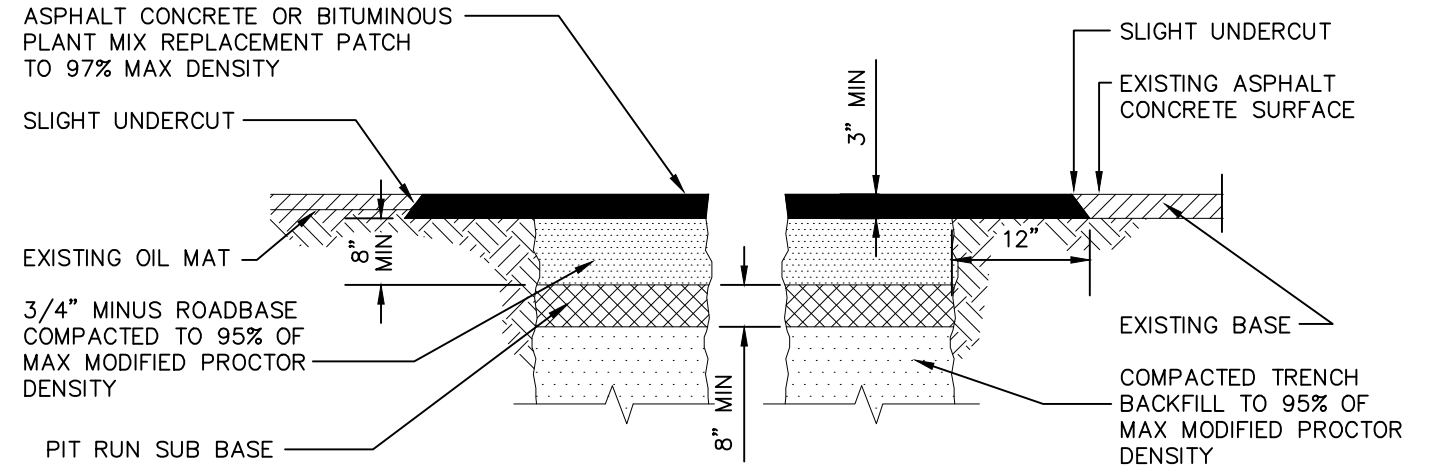

FLEXIBLE PAVEMENT PATCH

GENERAL NOTE:

CONCRETE MIX SHALL BE CLASS 4000 HIGH EARLY STRENGTH CONCRETE MEETING THE REQUIREMENTS OF THESE SPECIFICATIONS.

PAVEMENT PATCHING DETAILS

NOTE: MAX 10' TOOLED CONTROL JOINTS, EXPANSION JOINTS AT 50 FEET UNLESS OTHERWISE APPROVED.

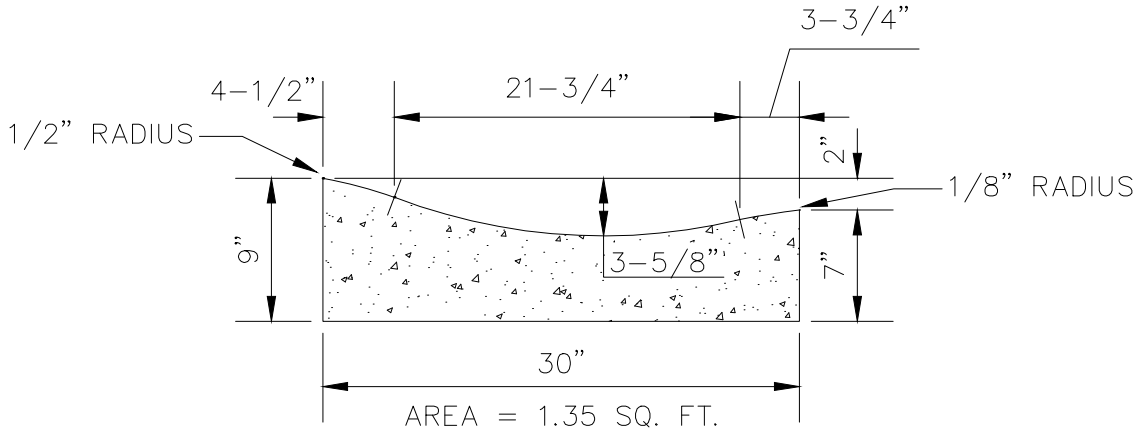

ROLL GUTTER
TO BE USED ONLY IN SPECIAL CONDITIONS APPROVED BY THE CITY

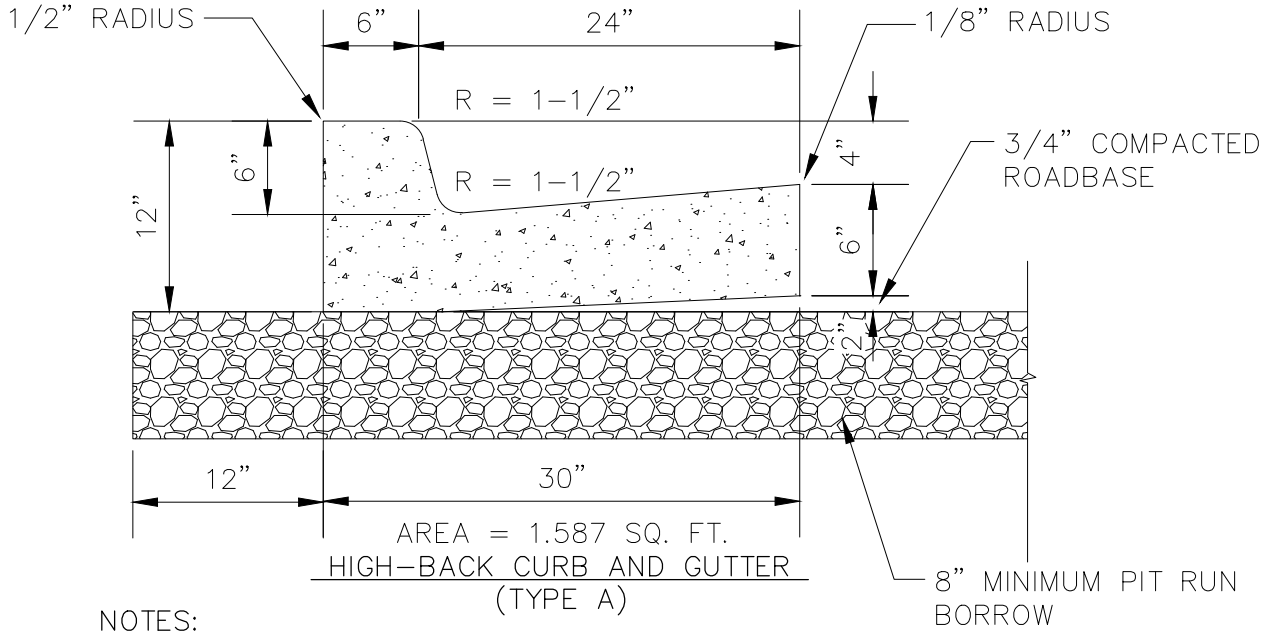

HIGH-BACK CURB AND GUTTER
(TYPE A)

NOTES:
NO HONEYCOMB WILL BE PERMITTED
ALL CURB & GUTTER IS TO BE BEDDED WITH UNTREATED BASE COURSE
NO GRAVEL SHALL BE PERMITTED

4-110

CURB AND GUTTER DETAILS

REV. JAN 03

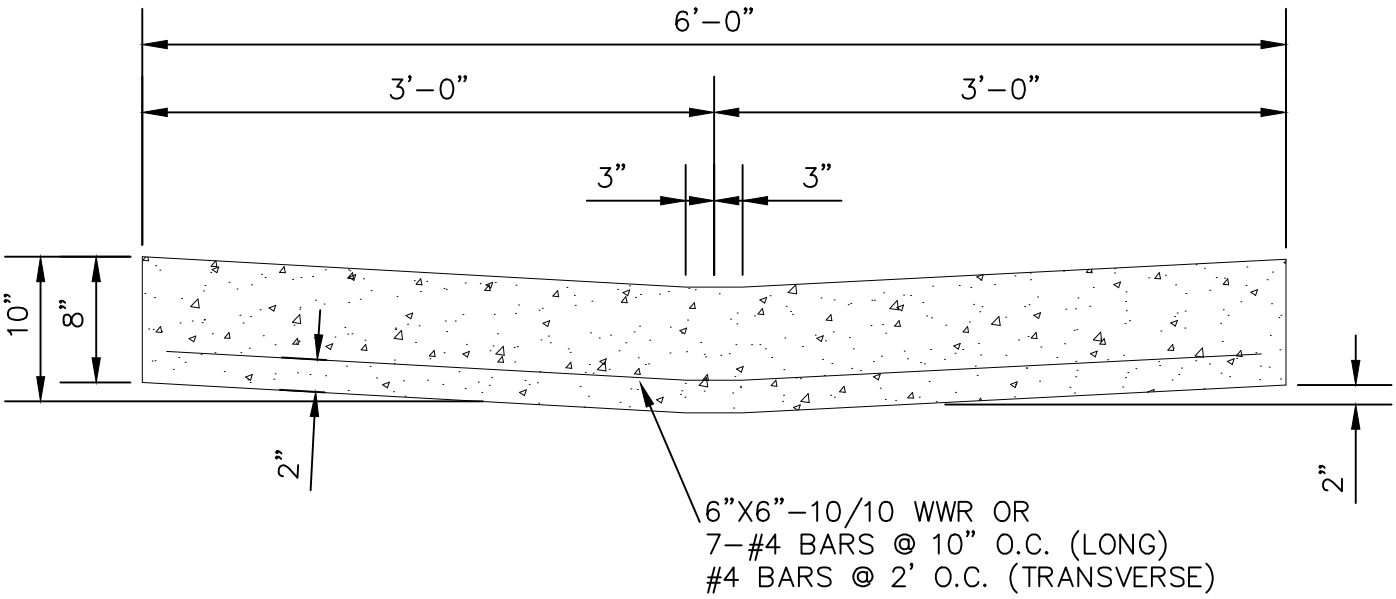

6' DRAIN GUTTER AT INTERSECTION

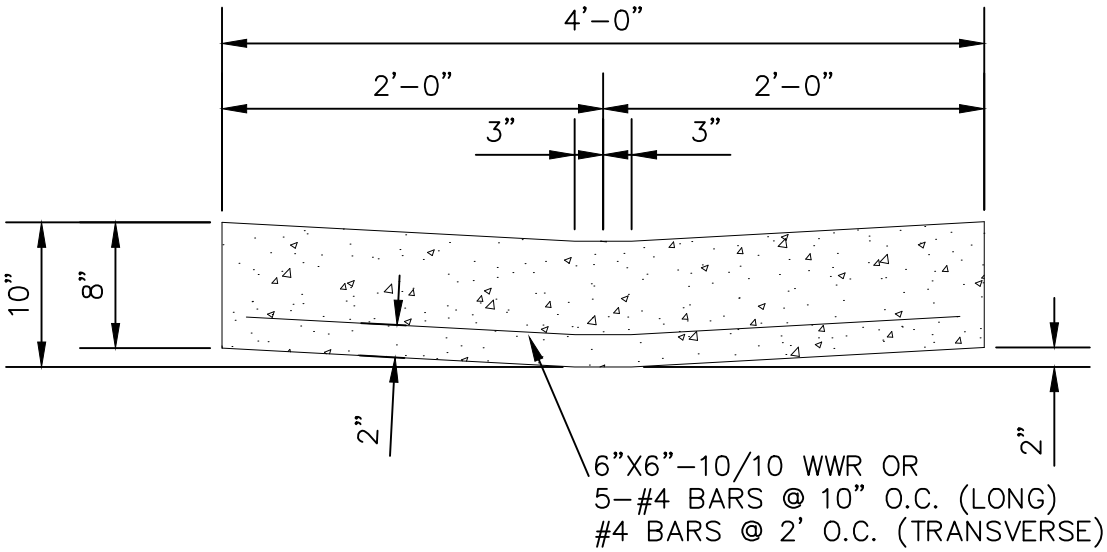

4' DRAIN GUTTER AT INTERSECTION

NOTE: ALL DRAIN GUTTER IS TO BE BEDDED WITH
MIN. OF 4" OF UNTREATED COMPACTED BASE COURSE.

4-111

DRAIN GUTTER DETAILS

REV. JAN 03

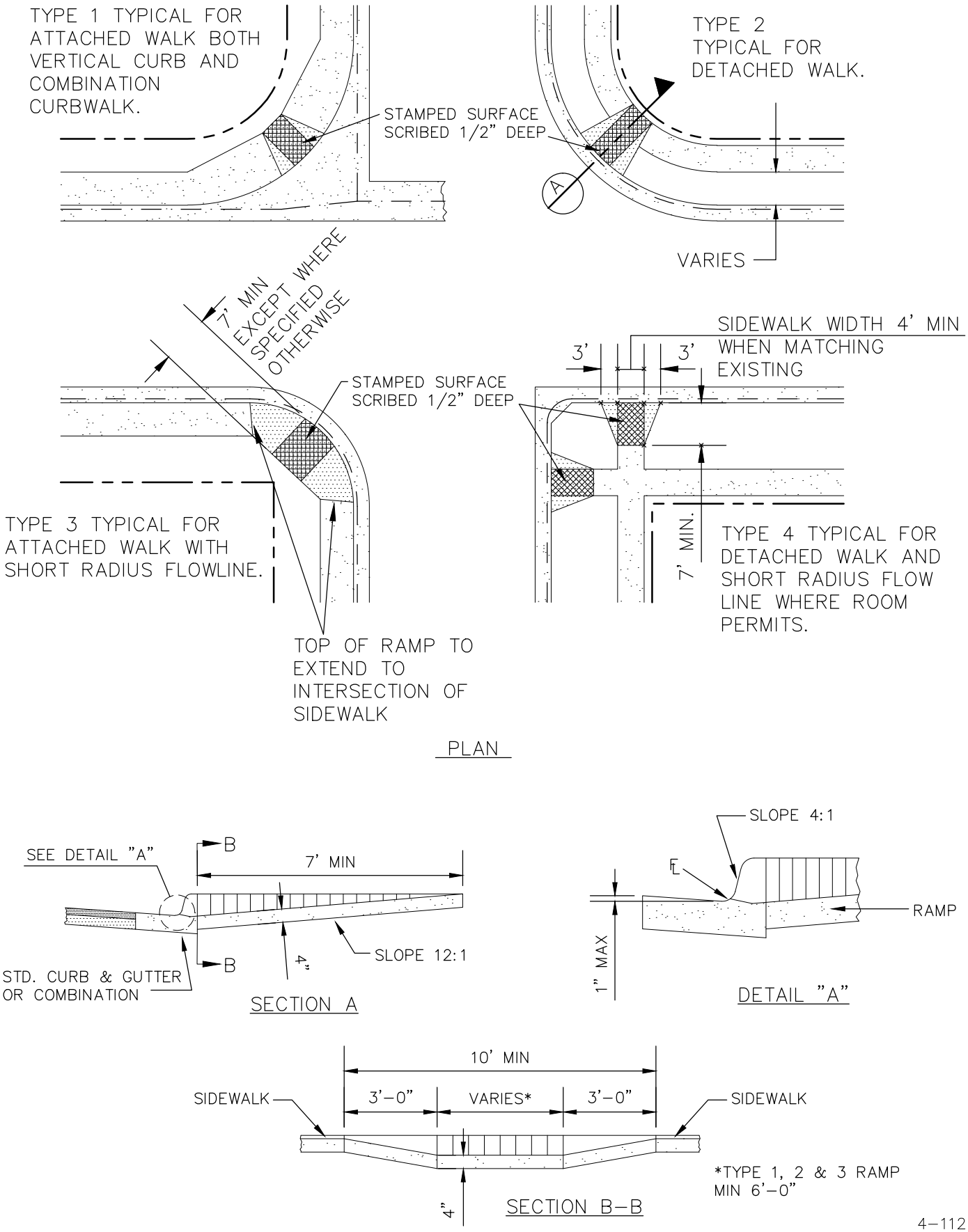

HANDICAP RAMP DETAILS

REV. JAN 03

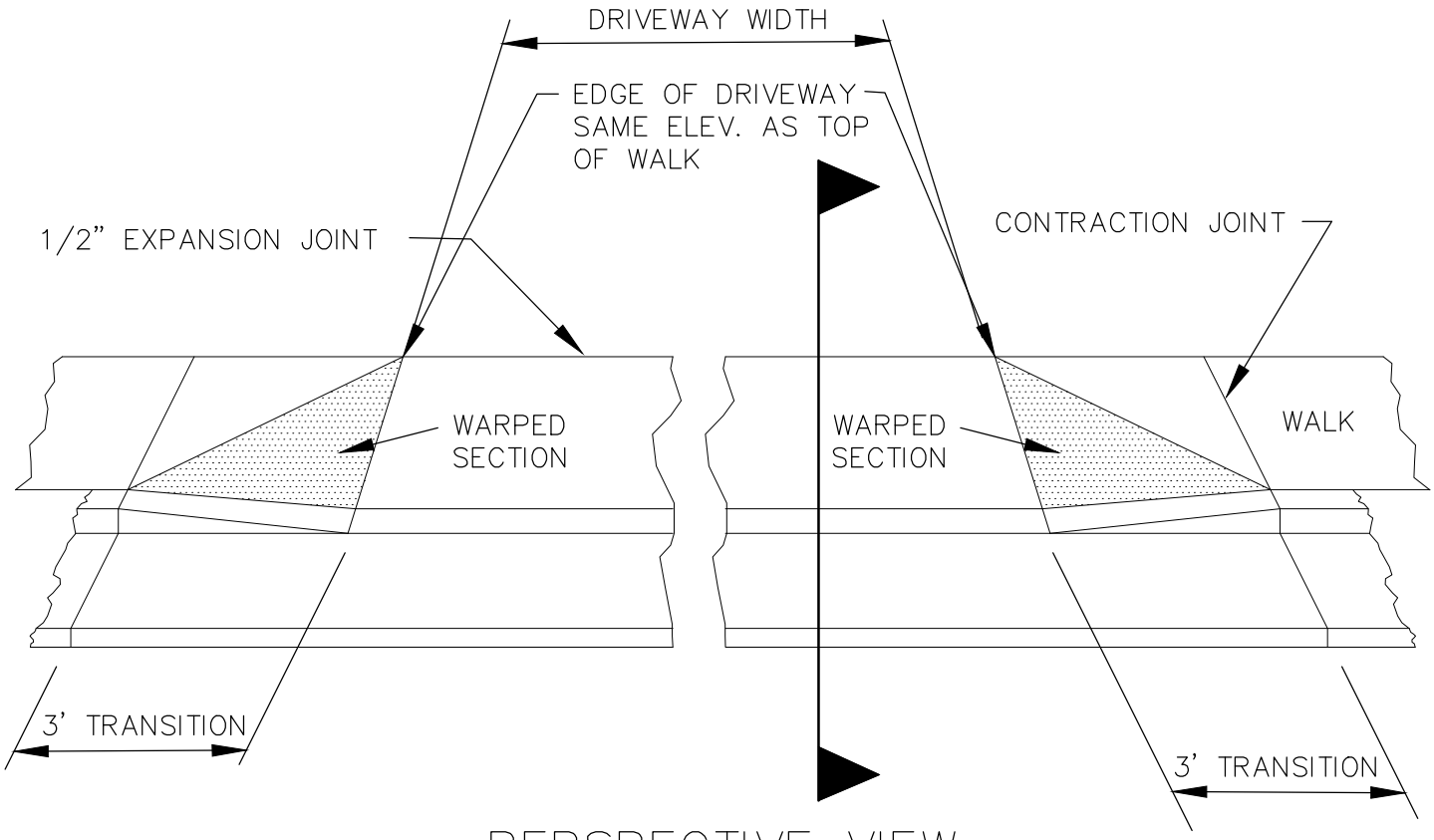

PERSPECTIVE VIEW

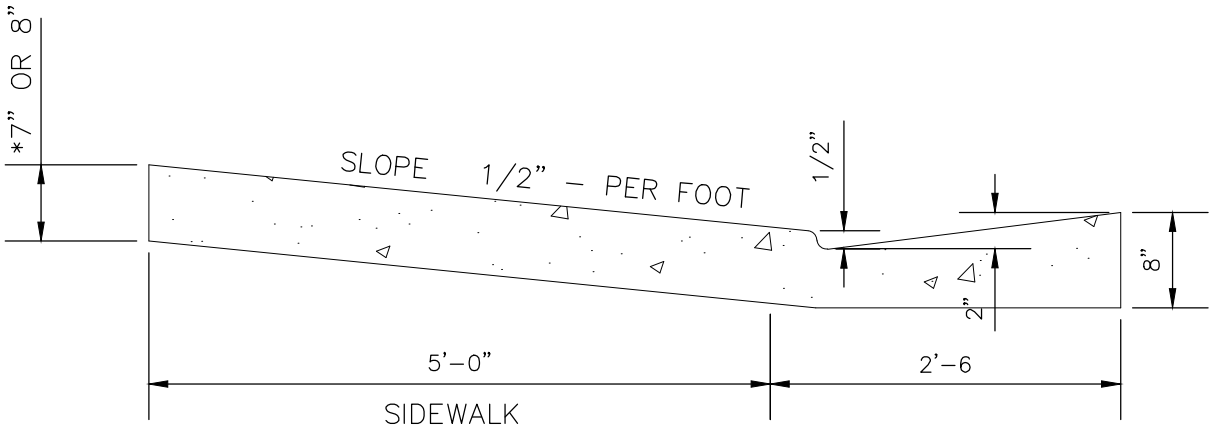

*DRIVEWAY THICKNESS:
7" FOR RESIDENTIAL AREAS
8" FOR COMMERCIAL AREAS AND PUBLIC ALLEYS

SECTION

NOTE: ALL DRIVEWAYS ARE TO BE BEDDED WITH A MIN. OF 4" OF UNTREATED BASECOURSE.

4-113

DRIVEWAY DETAILS (HIGHBACK CURB & GUTTER)

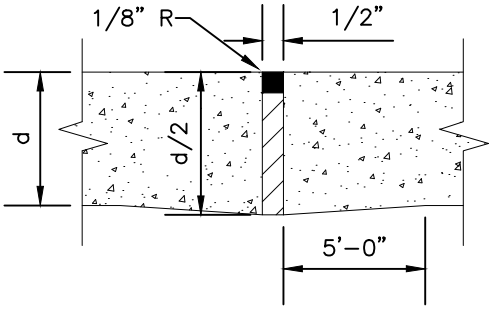

TYPE 'A' EXPANSION JOINT

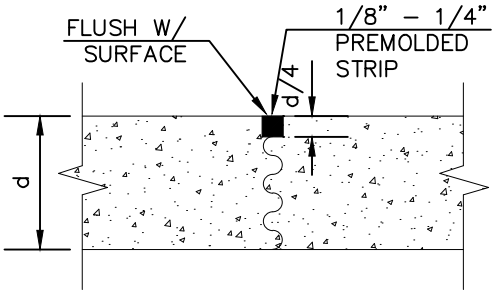

TYPE 'D' SAWED OR PREMOLDED STRIP LONGITUDINAL OR TRANSVERSE

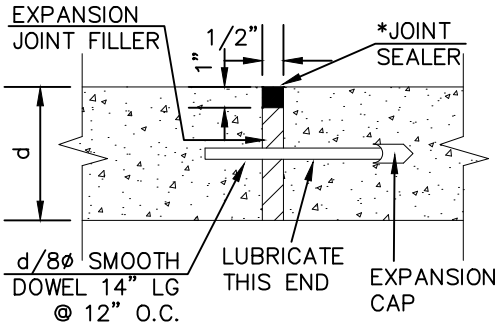

TYPE 'A' ALTERNATE EXPANSION JOINT

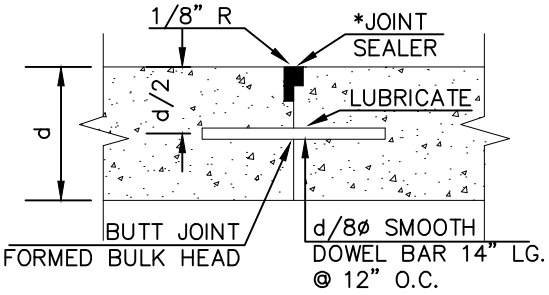

TYPE 'E' PLANNED TRAVERSE CONSTRUCTION JOINT

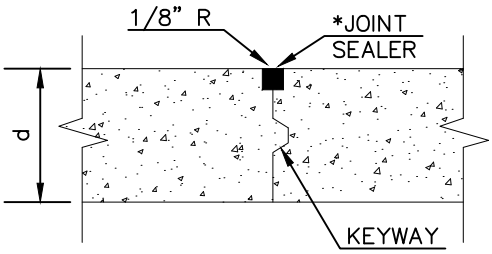

TYPE 'B' LONGITUDINAL CONSTRUCTION JOINT

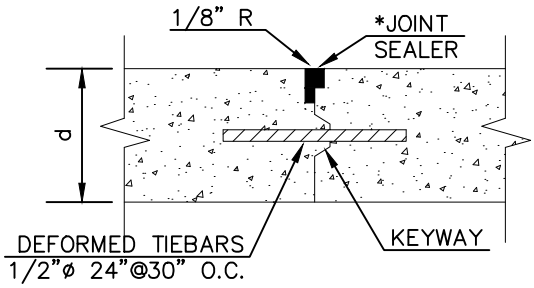

TYPE 'F' EMERGENCY TRANSVERSE CONSTRUCTION JOINT

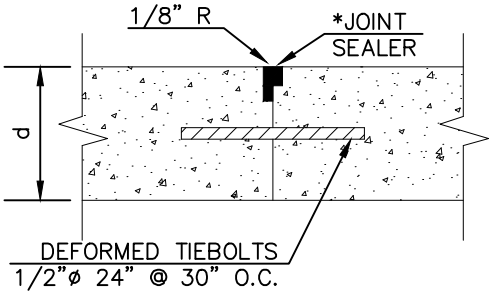

TYPE 'C' TIED BUTT LONGITUDINAL CONSTRUCTION JOINT

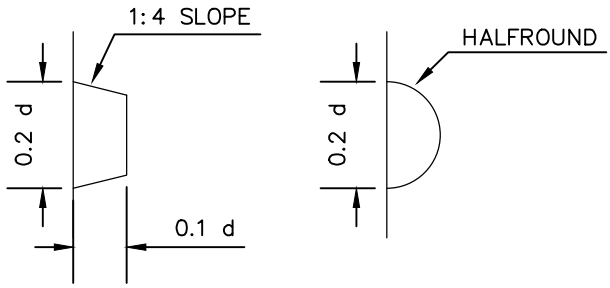

KEYWAYS FOR TYPE 'B' AND 'F'

*JOINT SEALER IS SUBJECT TO APPROVAL BY CITY ENGINEER AND DIRECTOR OF PUBLIC WORKS.

4–114

CONCRETE PAVEMENT JOINTS

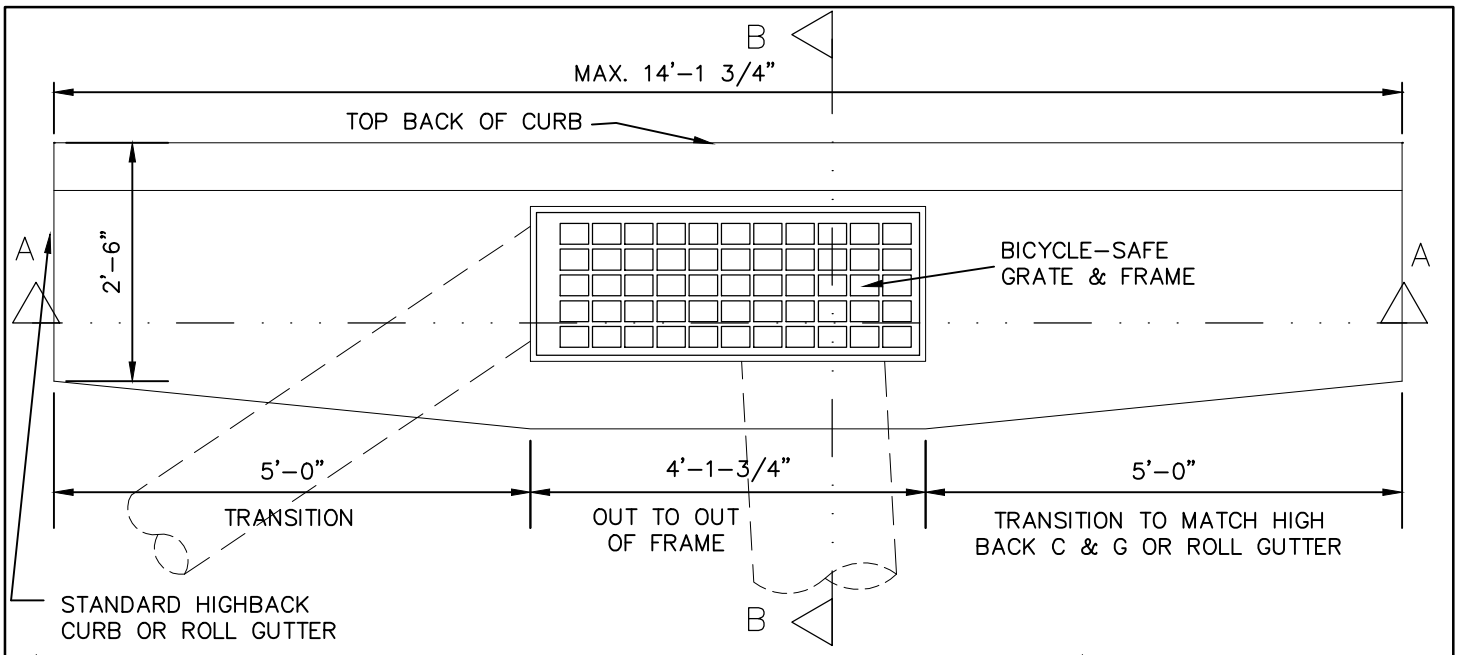

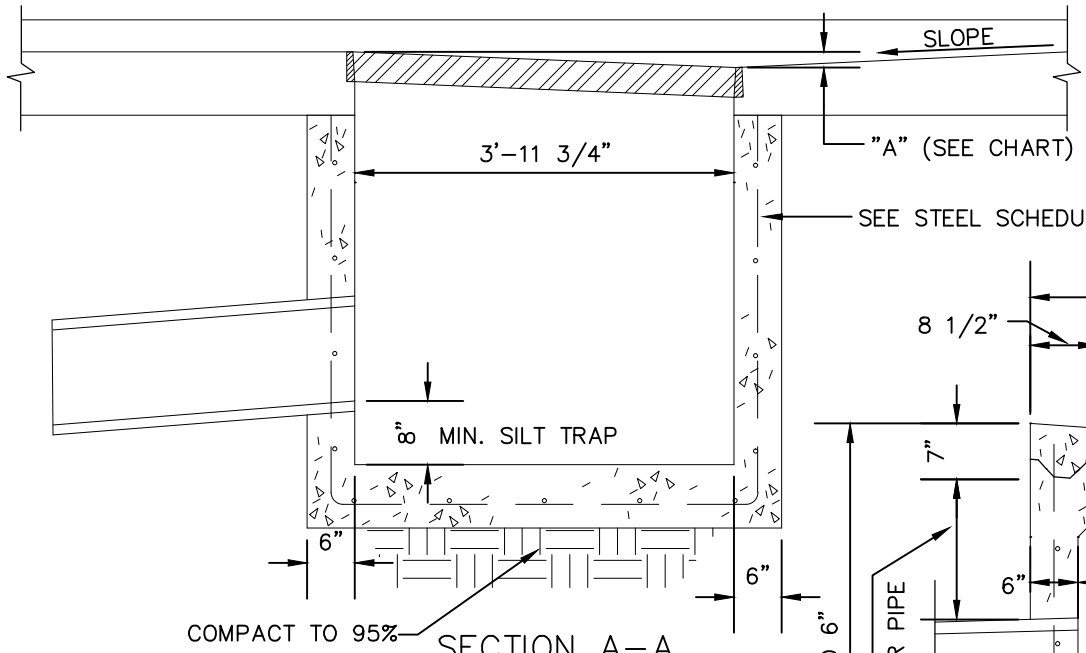

SECTION A-A

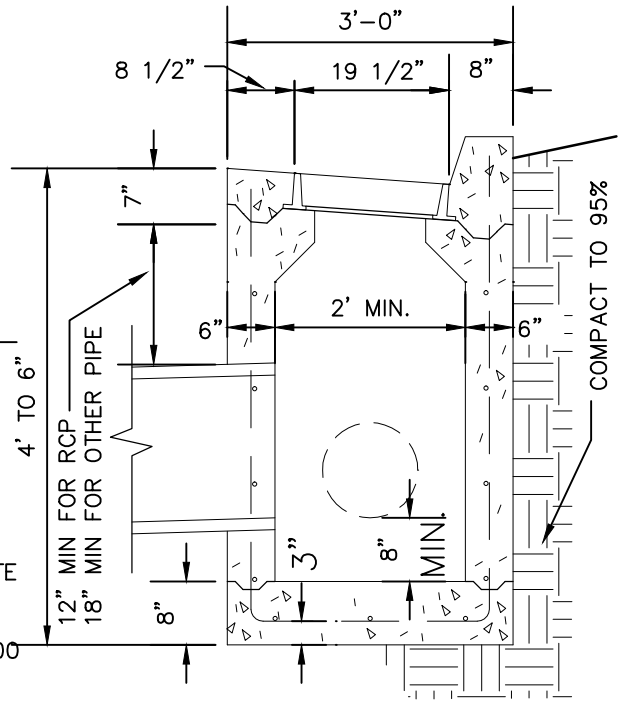

SECTION B-B

SLOPE OF C&G	DISTANCE "A"
10-8%	2"
8-6%	1-1/2"
6-4%	1"
4-2%	1/2"
2-0%	0"

NOTES:
1. THIS INLET BOX SHALL NOT BE USED WITHOUT EXPRESS APPROVAL OF PUBLIC WORKS DIRECTOR.
2. TOP TO BE POURED SEPERATE FROM WALLS. FLOOR MAY BE POURED WITH WALLS. ALL CONCRETE TO BE CLASS 4,000 WITH AIR ENTRAINMENT

STEEL SCHEDULE

	VERT. STEEL	HORIZ. STEEL	WALL THICKNESS
0' TO 6'	#4@12" O.C.	#4@12" O.C.	6" WALL
6'-0" OR DEEPER, CHECK W/CITY ENGINEER			

4-115

SINGLE GUTTER-INLET BOX

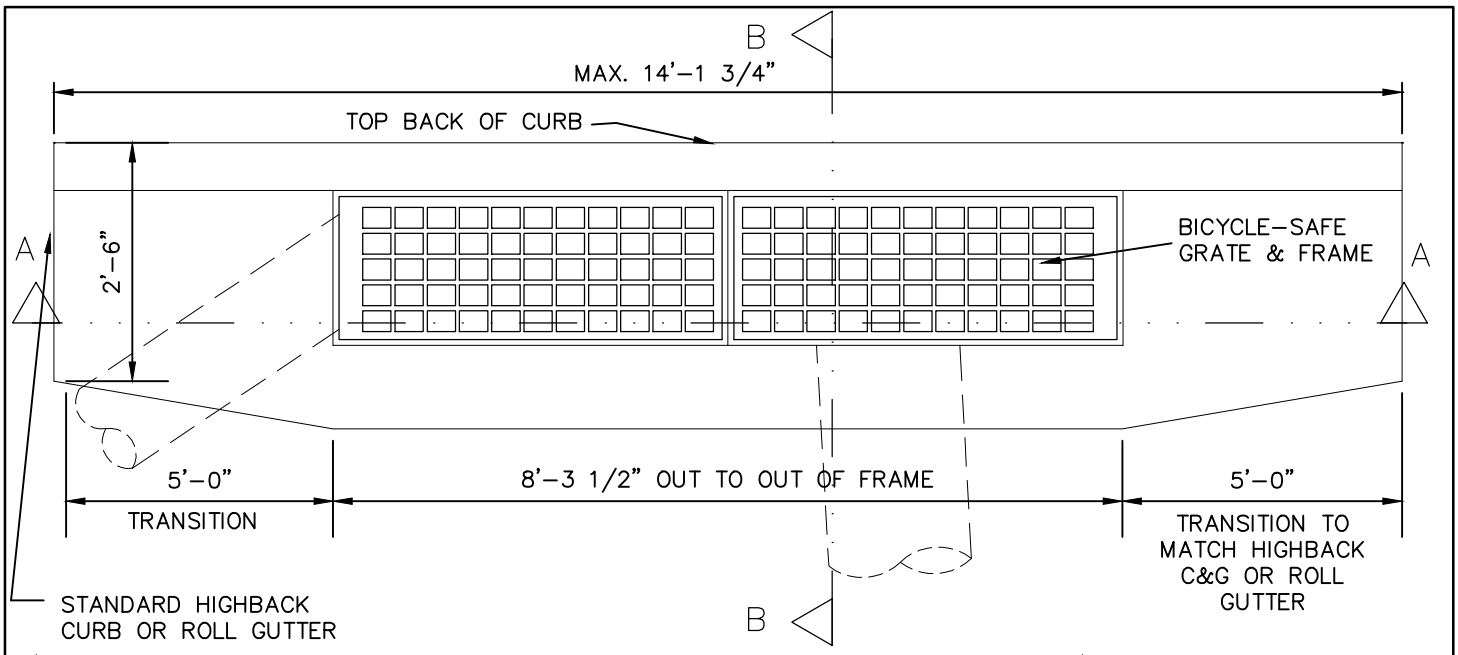

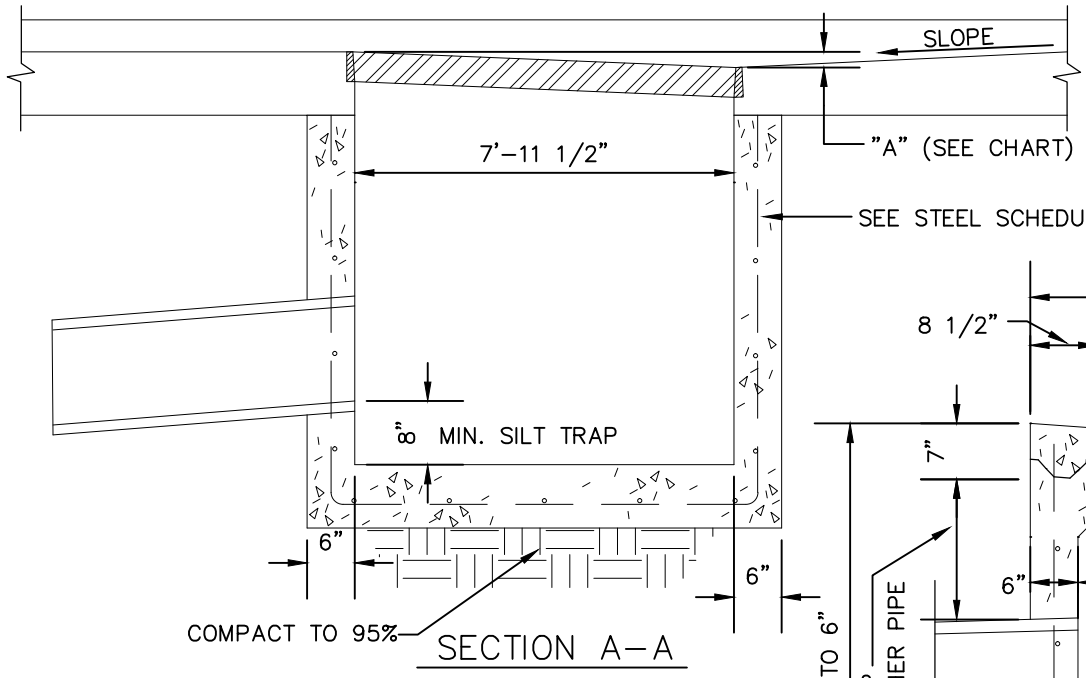

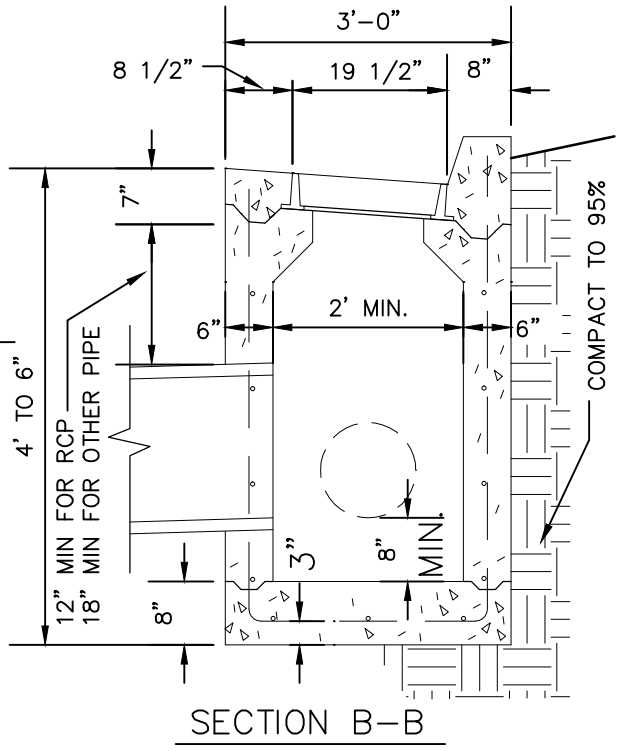

SLOPE OF C&G	DISTANCE "A"
10-8%	2"
8-6%	1-1/2"
6-4%	1"
4-2%	1/2"
2-0%	0"

NOTE:
1. THIS INLET BOX SHALL NOT BE USED WITHOUT EXPRESS APPROVAL OF PUBLIC WORKS DIRECTOR.

STEEL SCHEDULE

	VERT. STEEL	HORIZ. STEEL	WALL THICKNESS
0' TO 6'	#4@12" O.C.	#4@12" O.C.	6" WALL
6'-0" OR DEEPER, CHECK W/CITY ENGINEER			

4-116

DOUBLE GUTTER-INLET BOX "B"

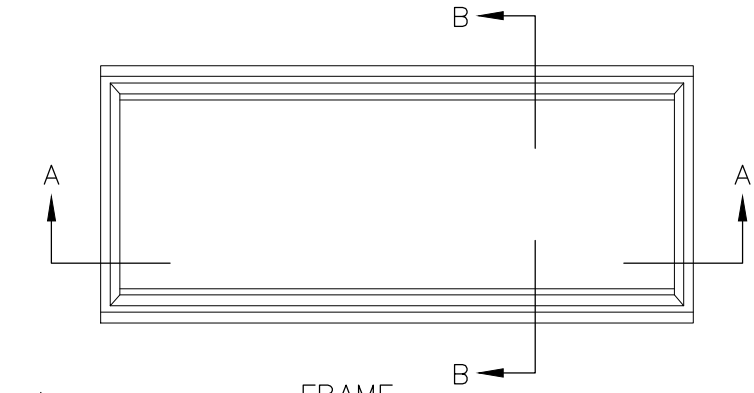

FRAME

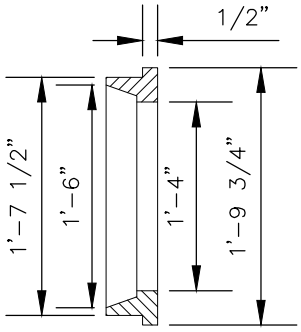

SECTION B-B

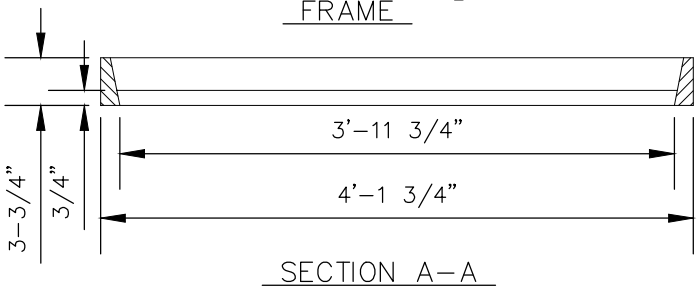

SECTION A-A

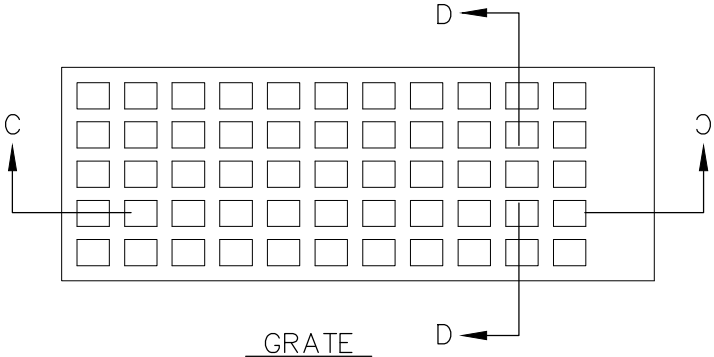

GRATE

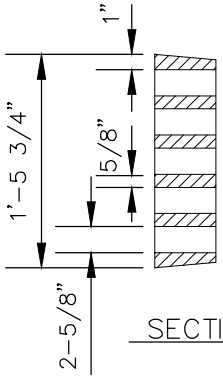

SECTION D-D

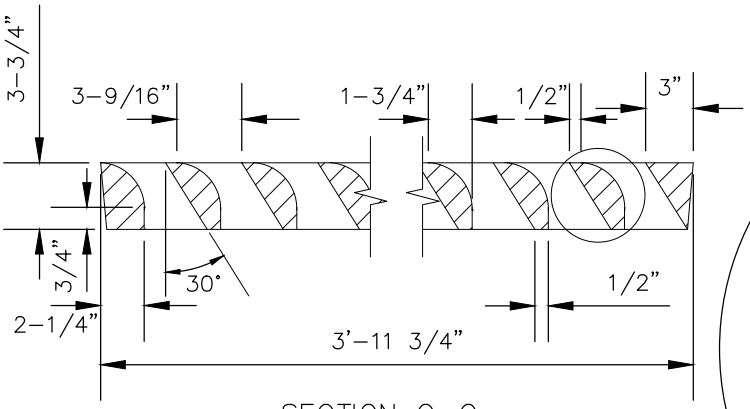

SECTION C-C

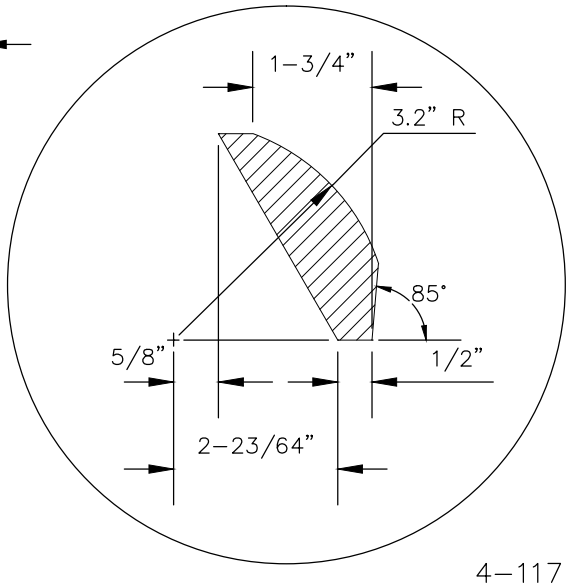

4-117

BICYCLE-SAFE GRATING & FRAME

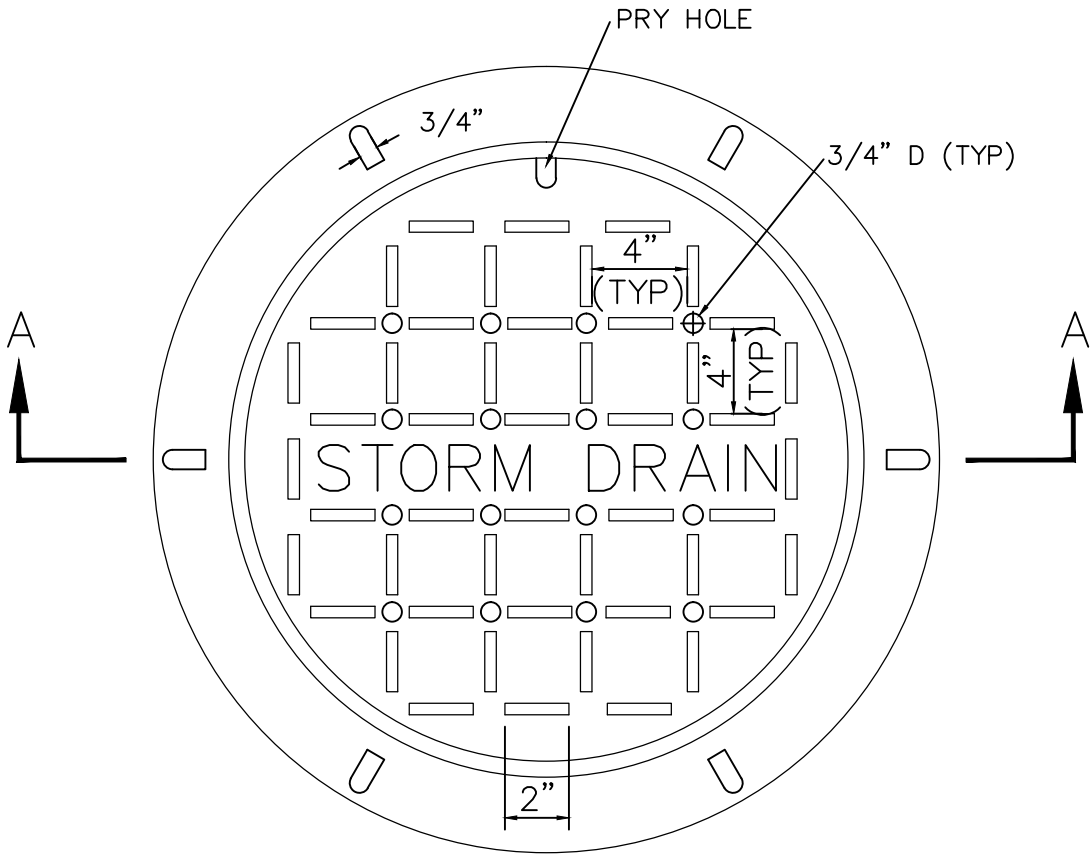

PLAN

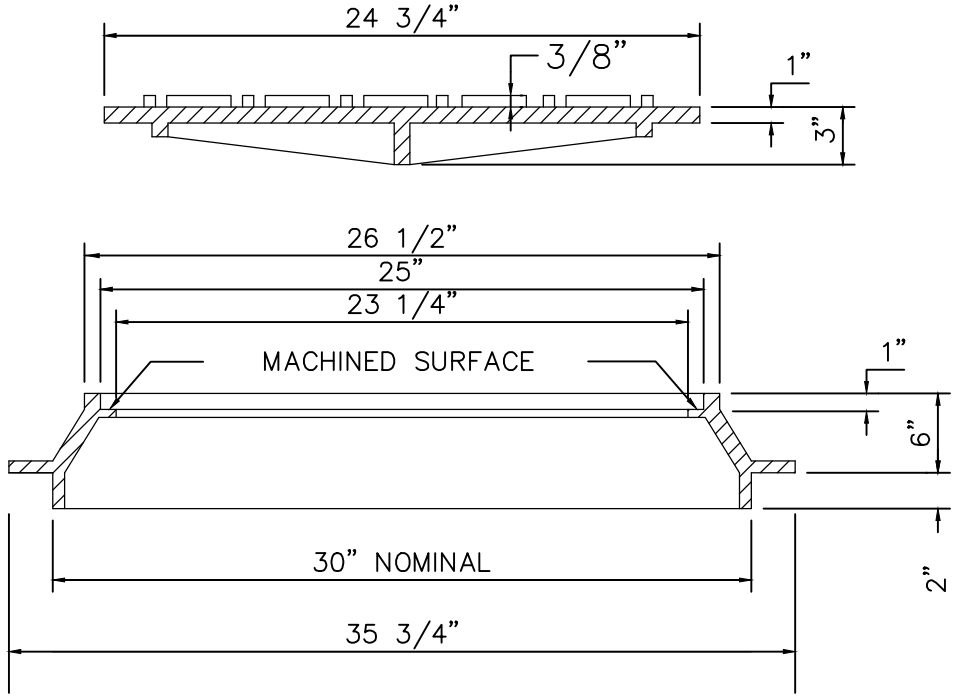

SECTION A–A

4–125

30" FRAME COVER (STORM DRAIN)

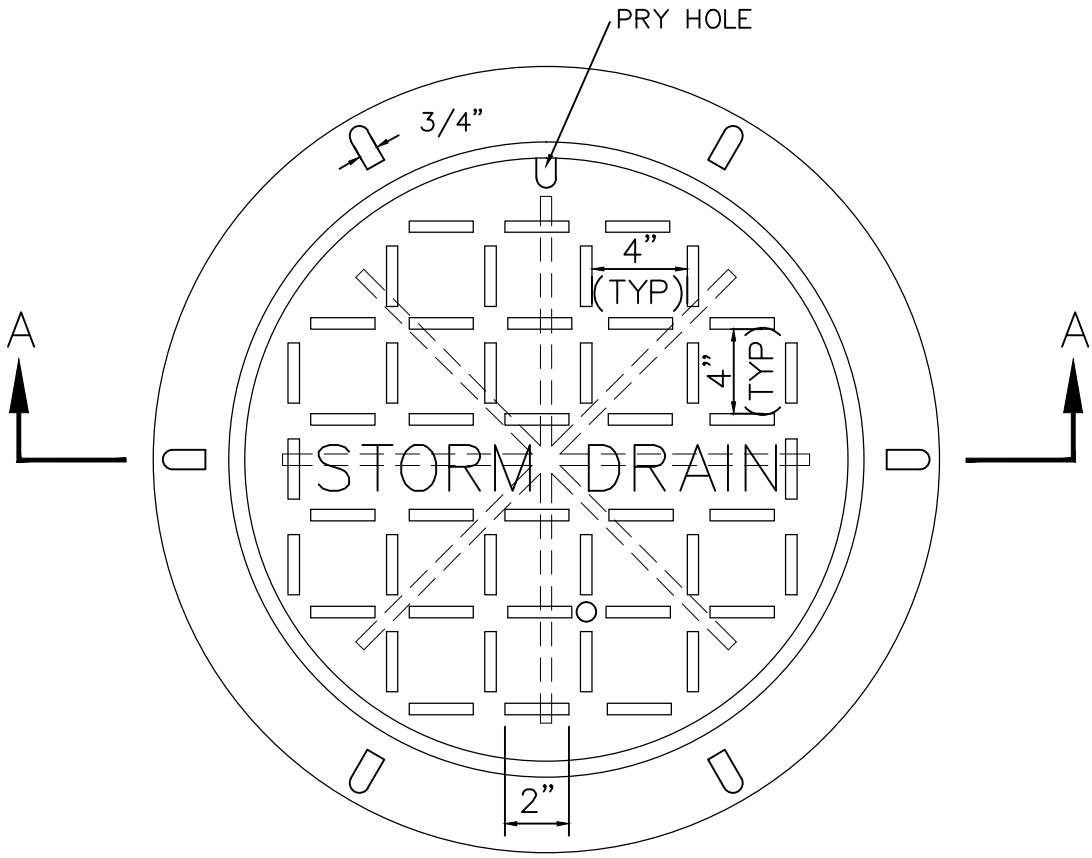

PLAN

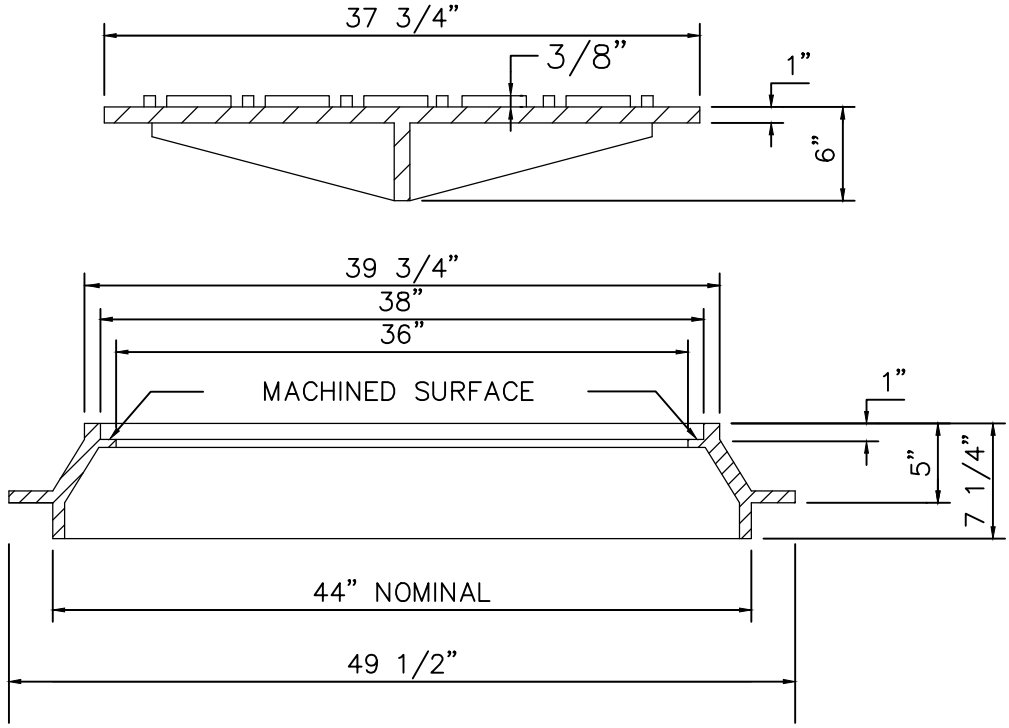

SECTION A–A

4–126

44" FRAME COVER (STORM DRAIN)

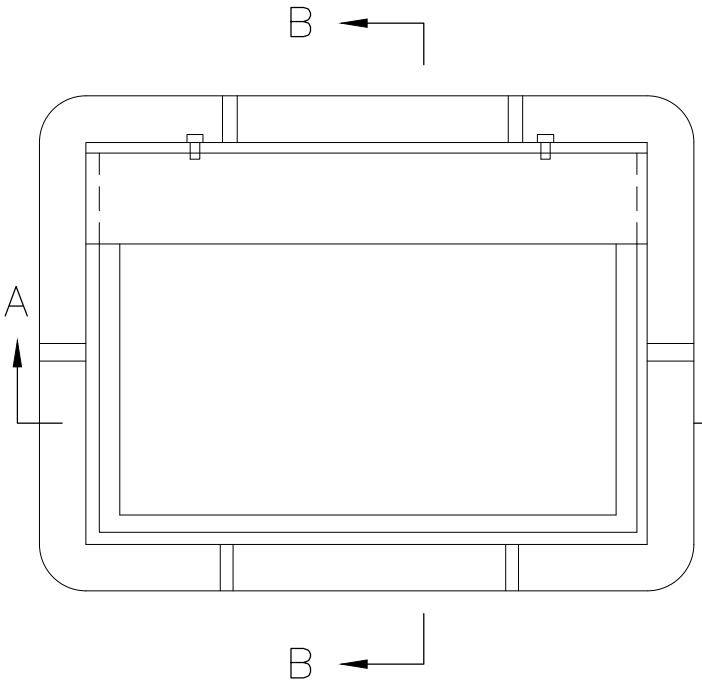

PLAN

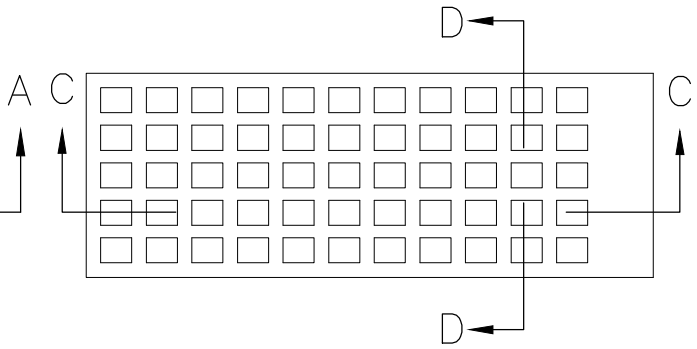

PLAN

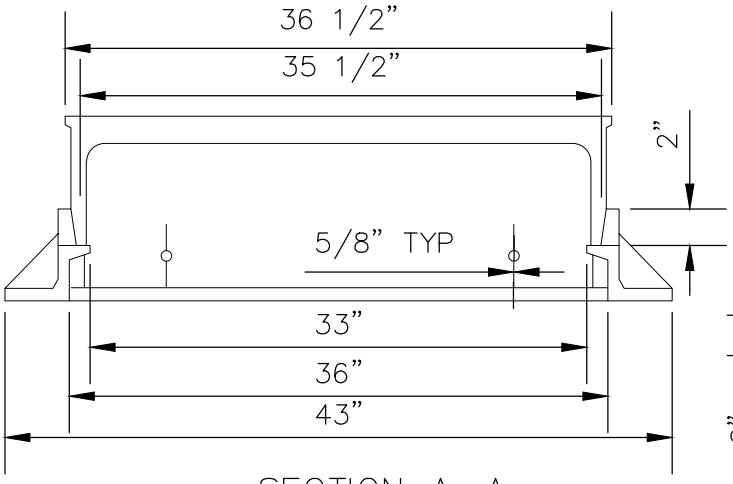

SECTION A–A

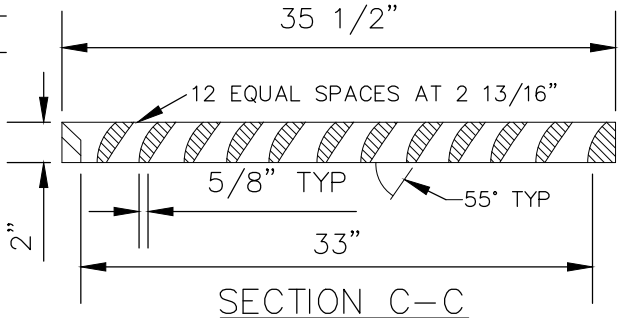

SECTION C–C

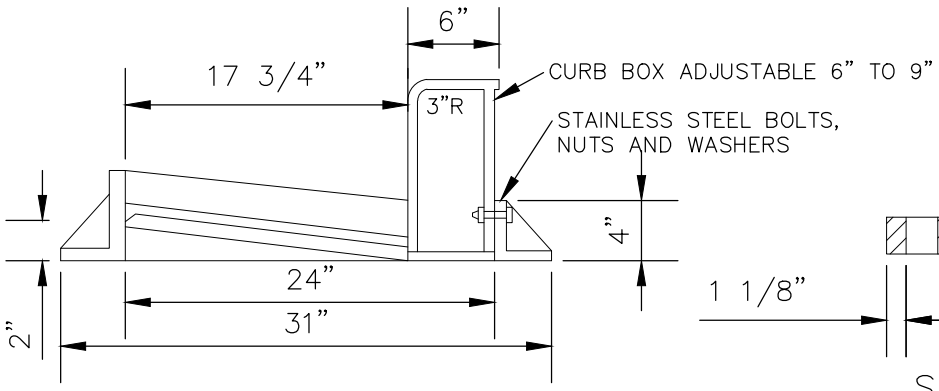

SECTION B–B

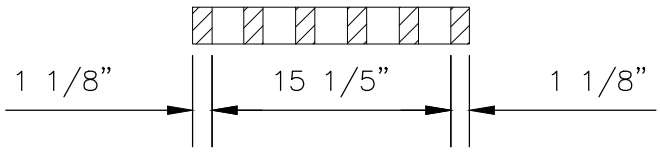

SECTION D–D

4–131

35 1/2" BICYCLE–SAFE GRATING AND FRAME W/ ADJ. CURB BOX

REV. 08–08

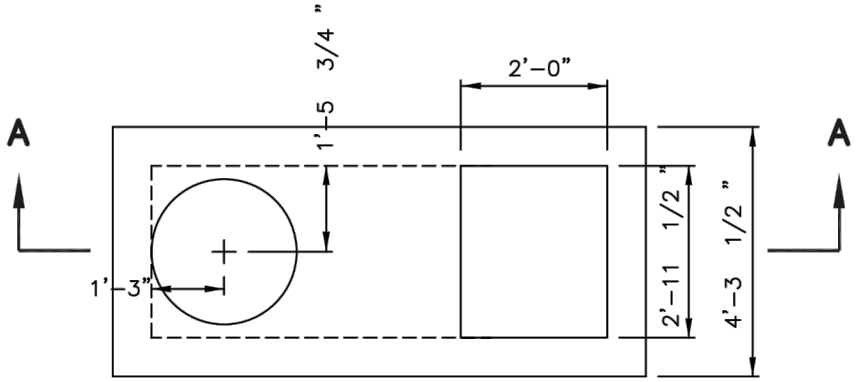

PLAN

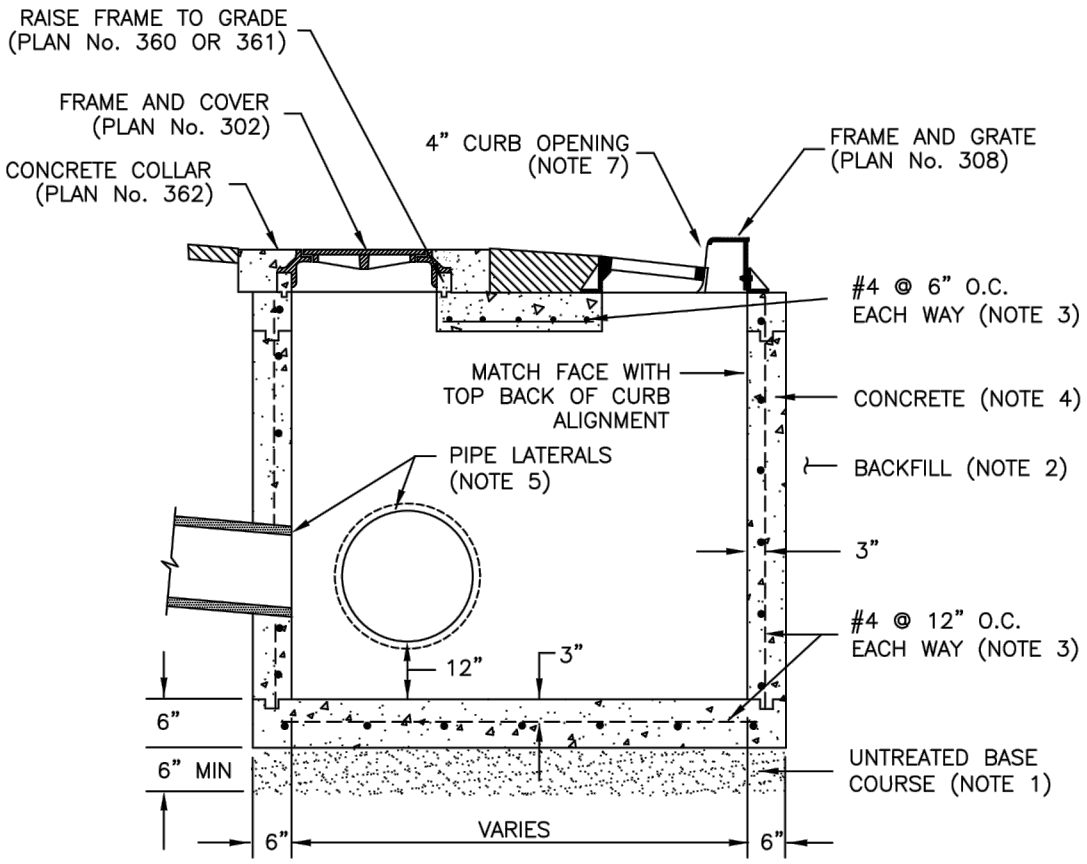

SECTION A–A

4–134

COMBINATION BOX

REV. APR. 13

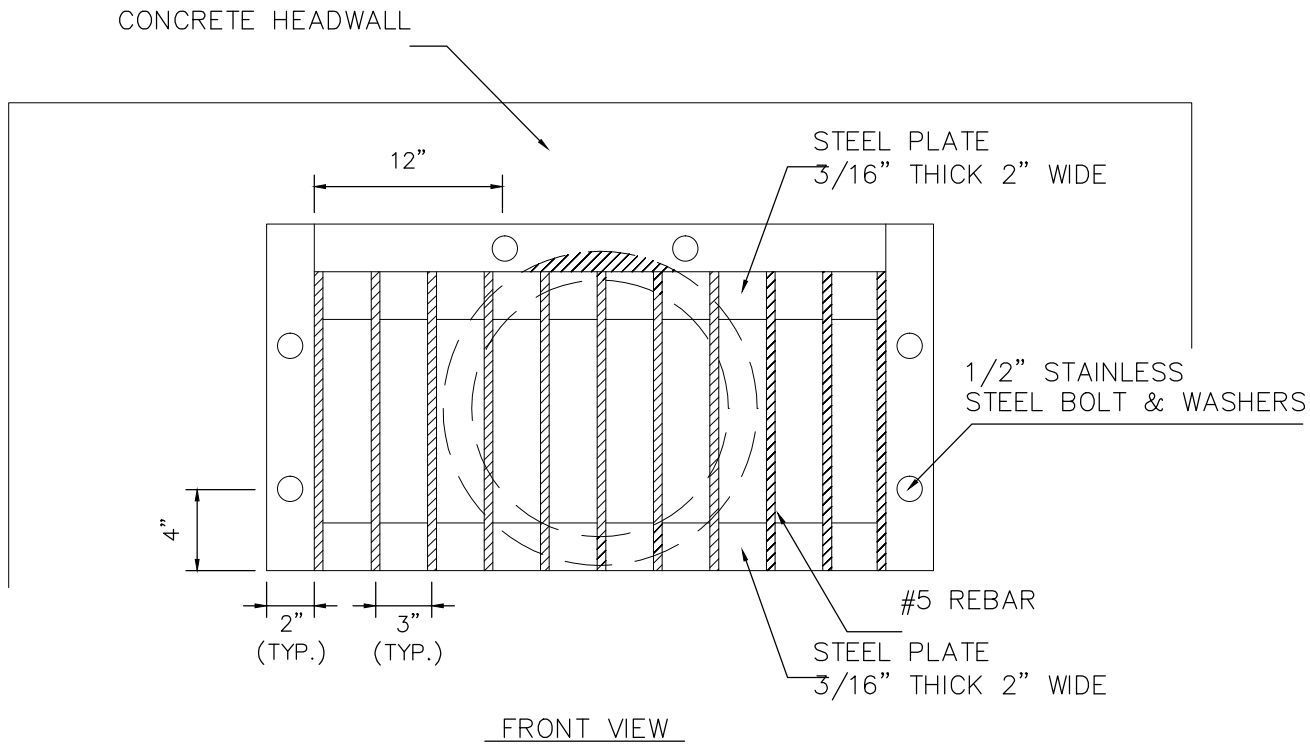

FRONT VIEW

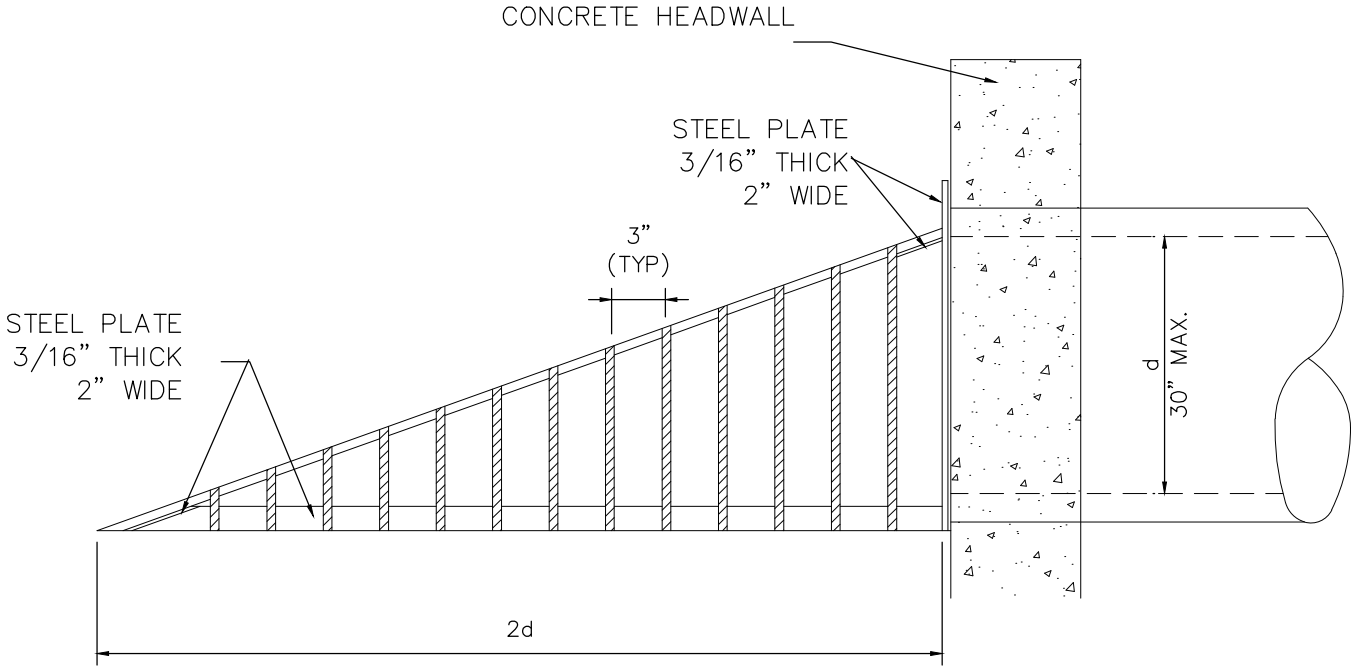

RIGHT SIDE VIEW

4–137

DEBRIS GRATE INLET

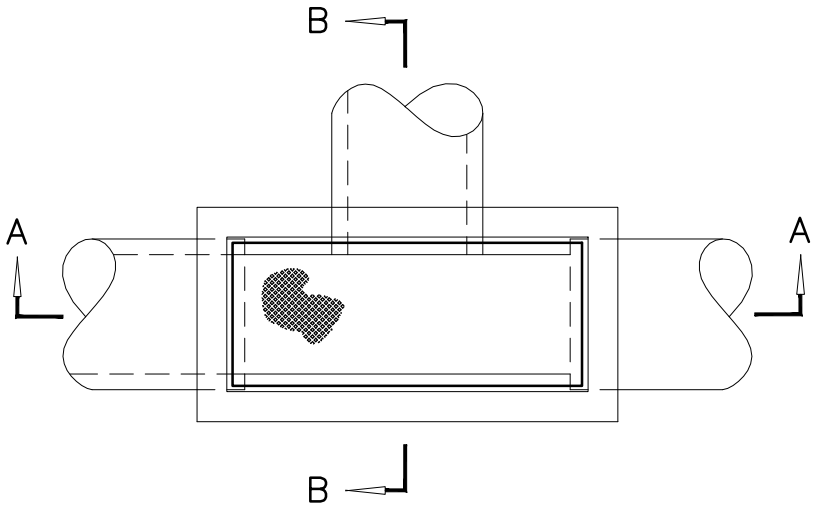

PLAN VIEW

NARRATIVE

THIS CONCRETE BOX MAY BE USED AS A CLEANOUT BOX OR INLET BOX. INSTALL THE APPROPRIATE FRAME AND COVER, OF FRAME AND GRATE.

MAXIMUM SIZE OF PIPE (SECTION A–A) IS 24" I.D.

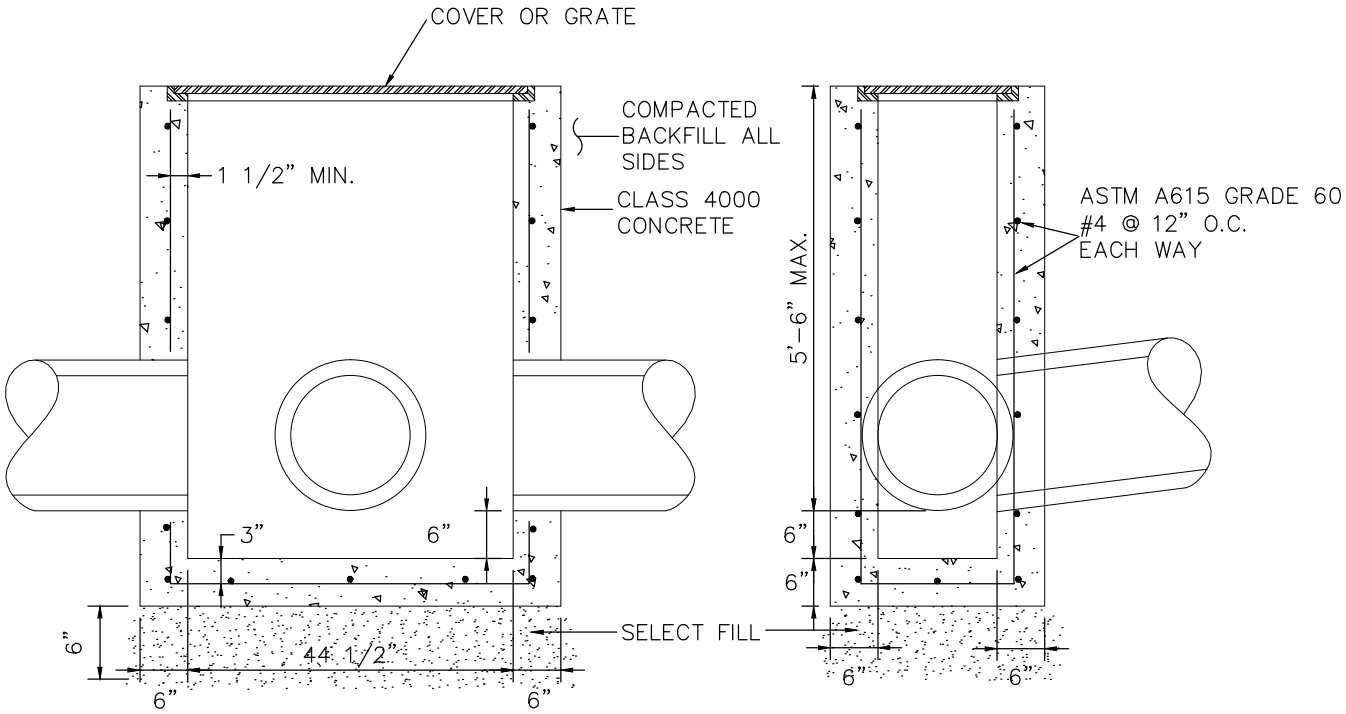

SECTION A–A

SECTION B–B

4–140

CLEANOUT BOX

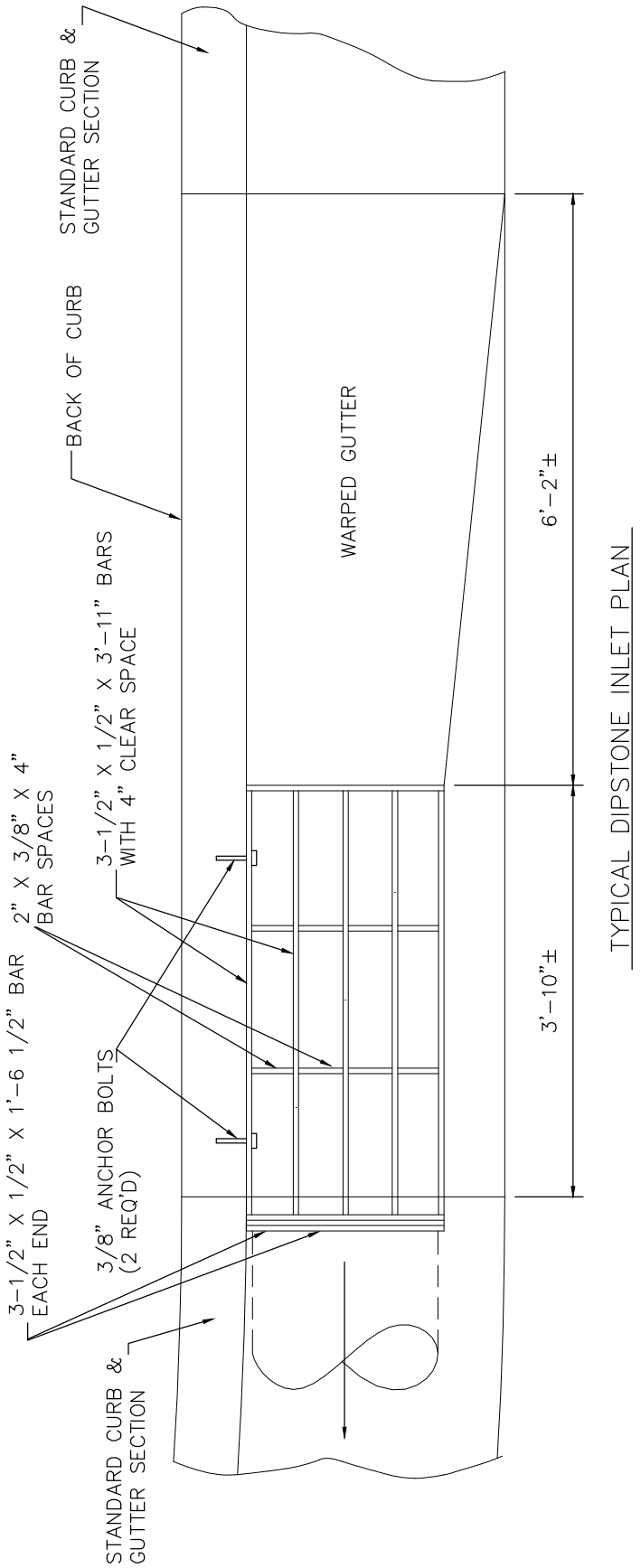

TYPICAL DIPSTONE INLET PLAN

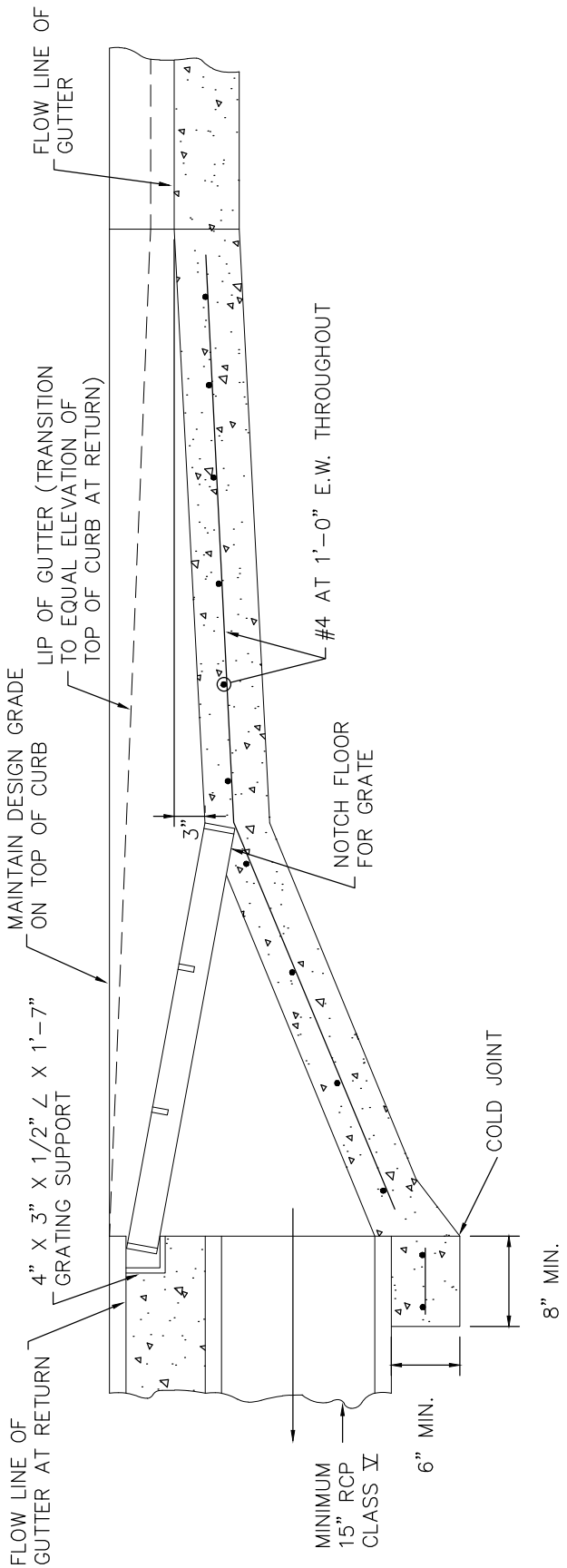

4-143

DIPSTONE INLET

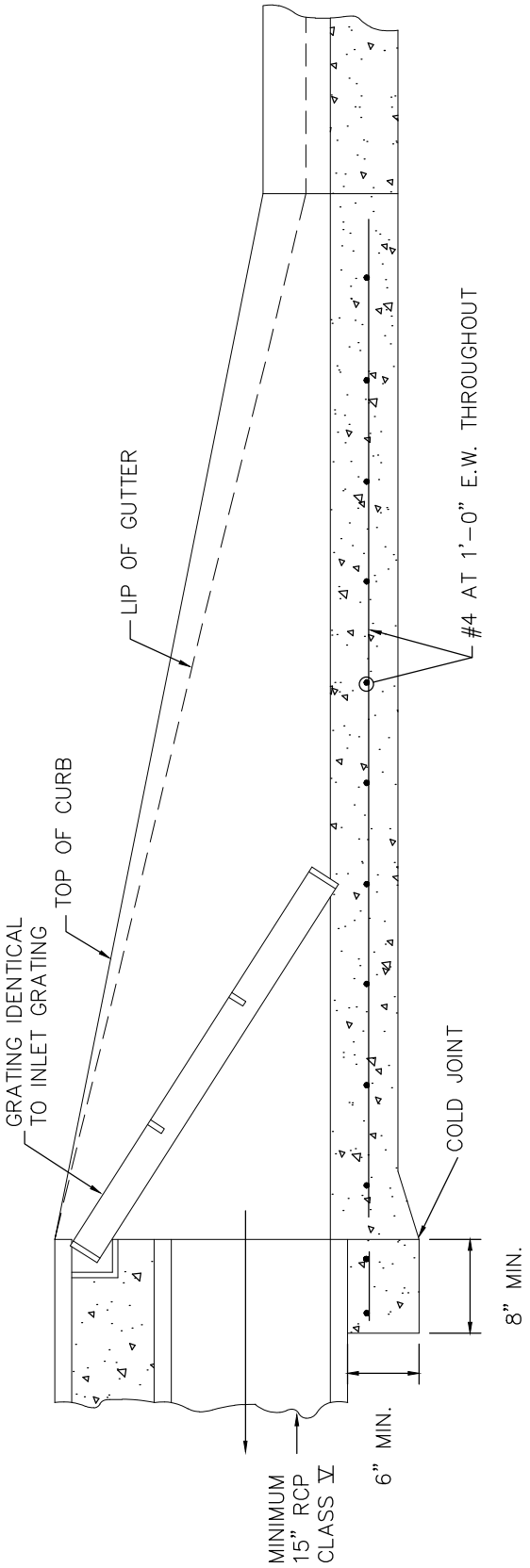

4-144

DIPSTONE OUTLET

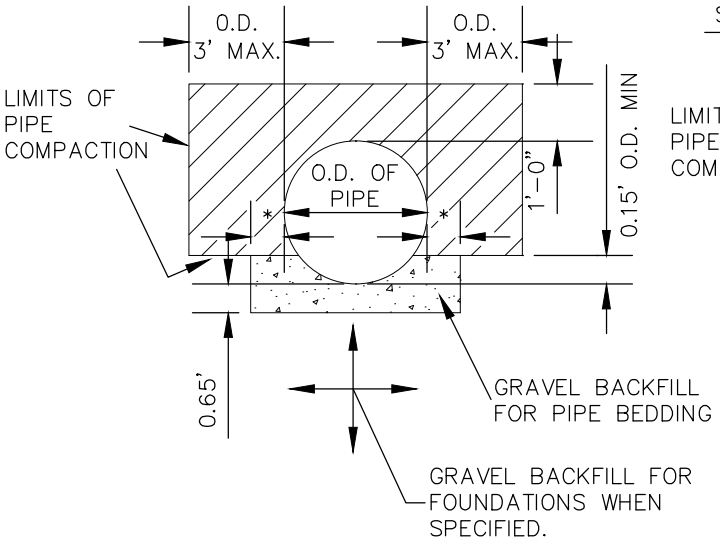

INSTALLATION FOR METAL OR CONCRETE PIPE

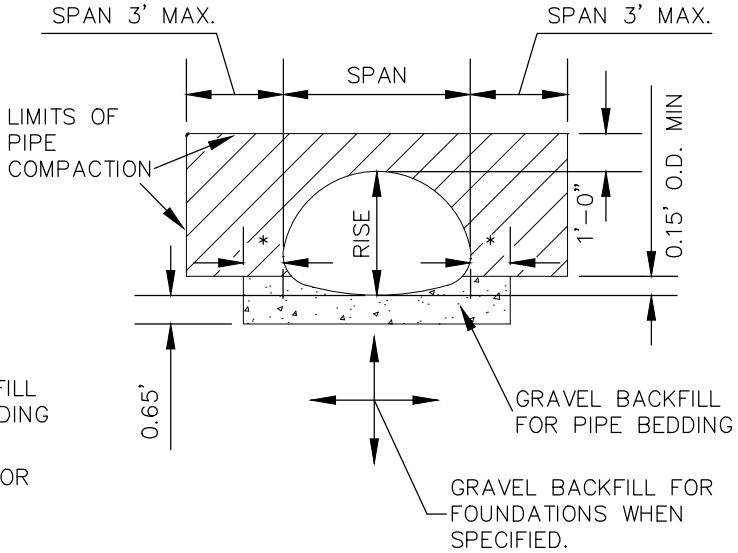

TYPICAL PIPE-ARCH INSTALLATION

PIPE	SIZE (INCHES)	MIN. DISTANCE BETWEEN BARRELS
CIRCULAR PIPE	12" TO 24"	12"
CONCRETE & METAL	30" TO 96"	DIAM/2
(DIAMETER	102" TO 180:	48"
PIPE-ARCH	18" TO 36"	12"
METAL ONLY	43" TO 142"	SPAN/3
(SPAN)	148" TO 199"	48"

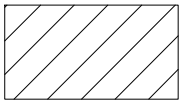

BACKFILL MATERIAL PLACED IN 0.5' LOOSE LAYERS AND COMPACTED TO A MIN. OF 95% OF MAX. DENSITY PER ASTM D1557.

NOTES:

PIPE COMPACTION LIMITS SHOWN ON THIS PLAN ARE FOR PIPE CONSTRUCTION IN AN EMBANKMENT. FOR PIPE CONSTRUCTION IN A TRENCH, THE HORIZONTAL LIMITS OF THE PIPE COMPACTION ZONE SHALL BE THE WALLS OF THE TRENCH.

O.D. IS EQUAL TO THE OUTSIDE DIAMETER OF A PIPE OF THE OUTSIDE SPAN OF A PIPE-ARCH. THE DIMENSIONS SHOWN AS O.D. WITH 3' AND 4' MAXIMUM SHALL BE O.D. UNTIL O.D. EQUALS 3' AND 4' AT WHICH POINT 3' AND 4' SHALL BE USED.

* 1'-0" FOR DIAMETERS 12" THROUGH 42" AND FOR SPANS THROUGH 50". 2'-0" FOR DIAMETERS GREATER THAN 42" AND FOR SPANS GREATER THAN 50".

4-145

CULVERT COMPACTION & BACKFILL

REV. 04-07

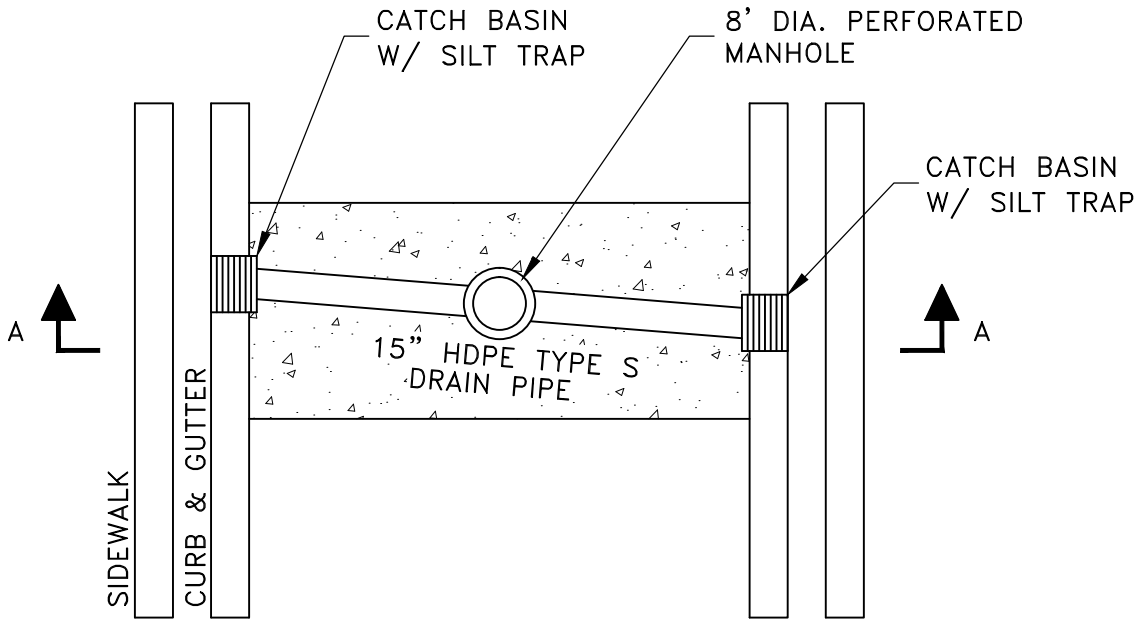

PLAN

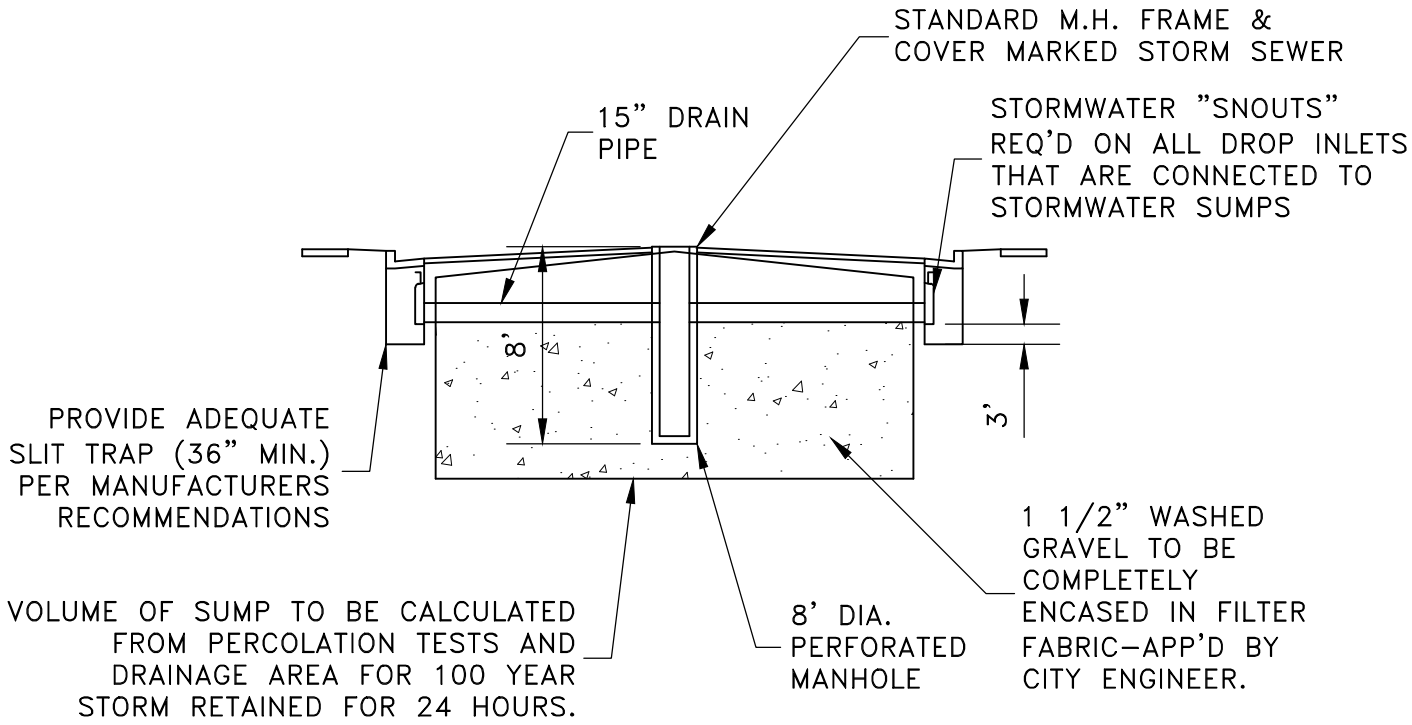

SECTION A-A

4–146

GRAVEL SUMP

04–07

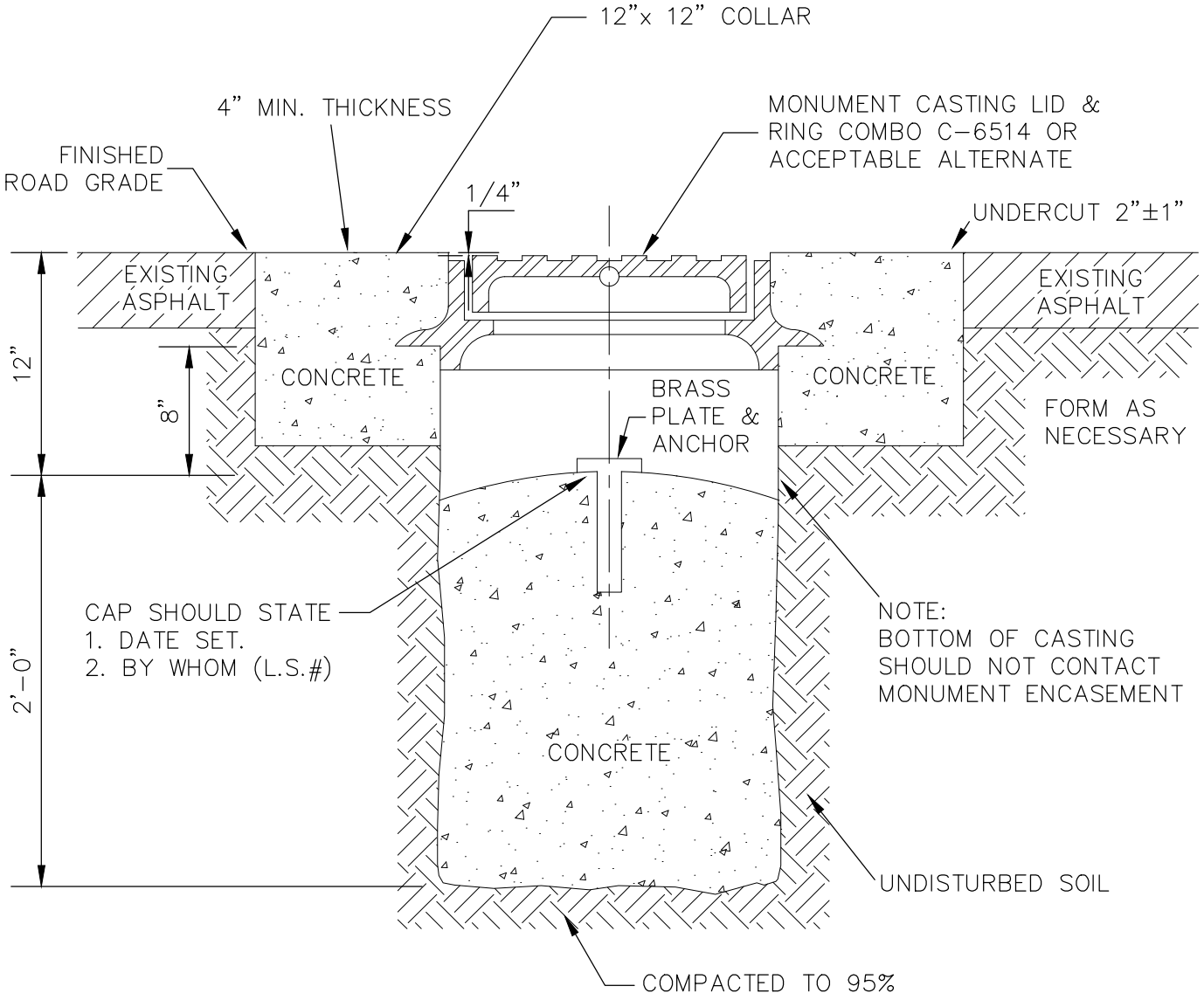

NOTE:
CASTINGS, CAST IRON PIPE, BRASS PLATE AND ANCHOR TO BE FURNISHED AND INSTALLED BY THE DEVELOPER UNDER CITY SUPERVISION.

4-147

STANDARD CITY STREET MONUMENT

04-07

MATERIALS:
- STRAW BALES BOUND WITH WIRE OR TWINE.
- WOOD OR STEEL STAKES 4' LONG MIN. (2"x2" WOOD, REBAR OR STEEL PICKETS, 2 STAKES PER BALE)

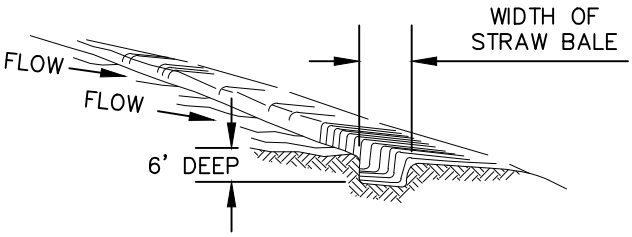

1. DIG A 6"x2' TRENCH. ALIGN TRENCH ALONG CONTOUR, BUT CURVED SLIGHTLY UPHILL SO RUNOFF CANNOT ESCAPE AROUND THE END BALES (SEE (2.) BELOW)

2. PLACE BALES IN TRENCH WITH ENDS TIGHTLY ABUTTED.

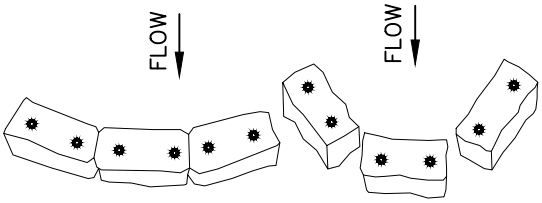

CORRECT INCORRECT

3. ANCHOR EACH BALE WITH 2 STAKES HAMMERED 1-1/2' TO 2' INTO THE GROUND. ANGLE FIRST STAKE IN EACH BALE TOWARD THE PREVIOUSLY LAID BALE.

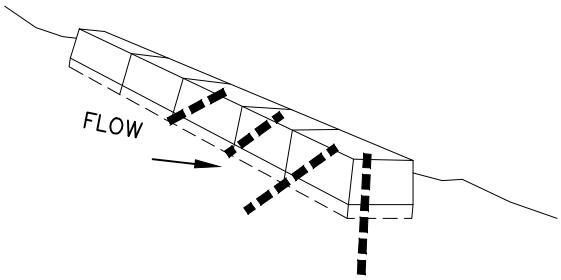

4. WEDGE LOOSE STRAW BETWEEN BALES. BACKFILL AND COMPACT THE EXCAVATED SOIL AGAINST THE UPHILL SIDE OF BARRIER.

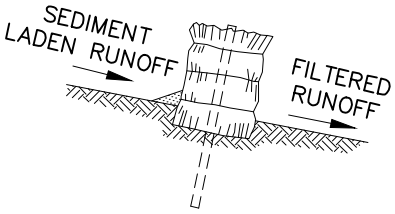

WHEN INSTALLING BALES ON PAVEMENT, PILE GRAVEL OR ROCK BEHIND THE BALES TO HOLD THEM IN PLACE.

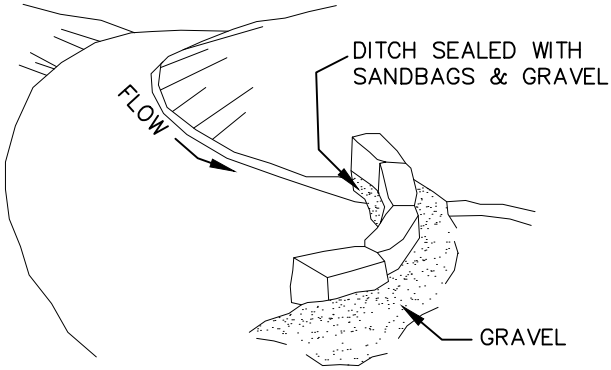

- INSPECT PERIODICALLY AND AFTER EACH STORM. REPLACE DAMAGED BALES; RE-ANCHOR DISPLACED ONES.
- CLEAN OUT SEDIMENT BEFORE IT REACHES THE TOP OF BALES.
- DEPOSIT THE SEDIMENT WHERE IT WILL NOT ENTER A DRAINAGE WAY.

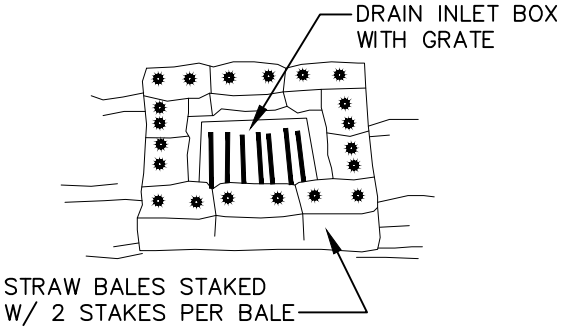

STRAW BALE/DRAIN INLET SEDIMENT FILTER

STRAW BALE INSTALL FOR EROSION CONTROL

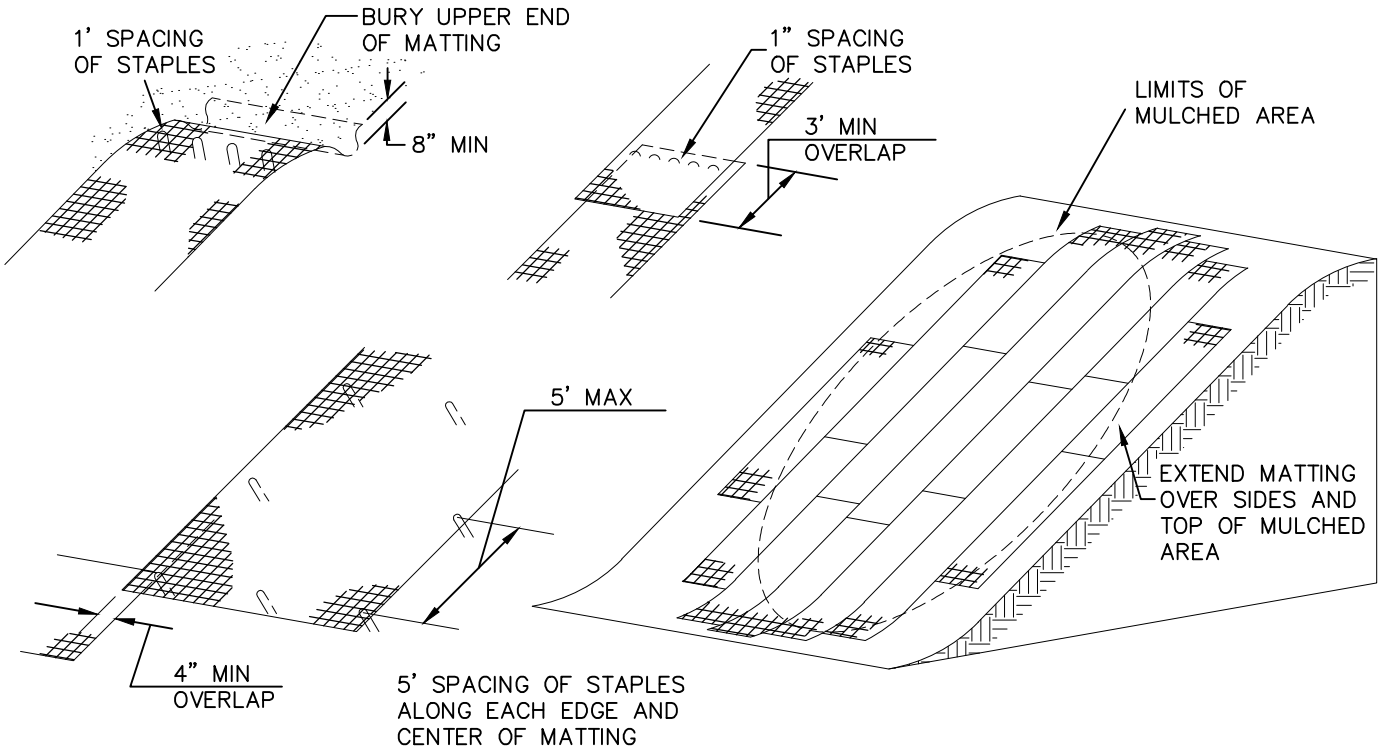

- JUTE MAT SHALL BE CLOTH OF A UNIFORM PLAIN WEAVE OF UNDYED AND UNBLEACHED SINGLE JUTE YARN, 48" IN WIDTH ± 1" AND WEIGHING AN AVERAGE 1.2 POUNDS PER LINEAR YARD OF CLOTH WITH A TOLERANCE OF ± 5%, WITH APPROXIMATELY 78 WARP ENDS PER WIDTH OF CLOTH AND 41 WEFT ENDS PER LINEAR YARD OF CLOTH. THE YARN SHALL BE OF A LOOSELY TWISTED CONSTRUCTION HAVING AN AVERAGE TWIST OF NOT LESS THAN 1.6 TURNS PER INCH AND SHALL NOT VARY IN THICKNESS BY MORE THAN 1/2 OF ITS NORMAL DIAMETER.
- INDIVIDUAL ROLLS SHOULD BE APPLIED UP AND DOWN THE SLOPE, NEVER ALONG THE CONTOUR.
- SIDES OF ROLLS SHALL OVERLAP AT LEAST 4 INCHES, AND ROLLS SHALL HAVE AT LEAST A 3' OVERLAP WHEN AN UPHILL ROLL JOINS TO A DOWNHILL ROLL. THE UPHILL ROLL SHALL OVERLIE THE DOWNHILL ROLL.
- STAPLES SHALL BE MADE OF WIRE, 0.091" IN DIAMETER OR GREATER, "U" SHAPED WITH LEGS AT LEAST 6" IN LENGTH AND A 1" CROWN. LONGER STAPLES ARE REQUIRED IN LOOSE OR SANDY SOILS.
- STAPLES SHALL BE DRIVEN PERPENDICULARLY INTO THE SLOPE FACE, AND SHALL BE SPACED APPROXIMATELY 5' APART DOWN THE SIDES AND CENTER OF THE ROLL. SPACING BETWEEN STAPLES AT THE UPPER END OF A ROLL OR AT THE END OVERLAP OF TWO ROLLS SHALL NOT EXCEED 1'.
- MATTING SHALL BE CONTINUED BEYOND THE EDGE OF THE MULCHED OR SEEDED AREA AT LEAST 1' AT THE SIDES AND 3' AT THE TOP AND BOTTOM OF THE AREA. IF EXISTING VEGETATION OR STRUCTURES MARK THE BOUNDARIES OF THE AREA, THE MATTING SHALL BE CONTINUED INTO THE STABLE VEGETATED AREA OR TO THE EDGE OF THE STRUCTURE.
- THE UPPER END OF THE MATTING AT THE TOP OF THE AREA SHALL BE BURIED IN A TRENCH AT LEAST 8" DEEP.
- THE MATTING SHALL MAKE UNIFORM CONTACT WITH THE SLOPE FACE UNDERNEATH. NO "BRIDGING" OF RILLS OR GULLIES IS ALLOWED.

4–149

JUTE MESH INSTALLATION

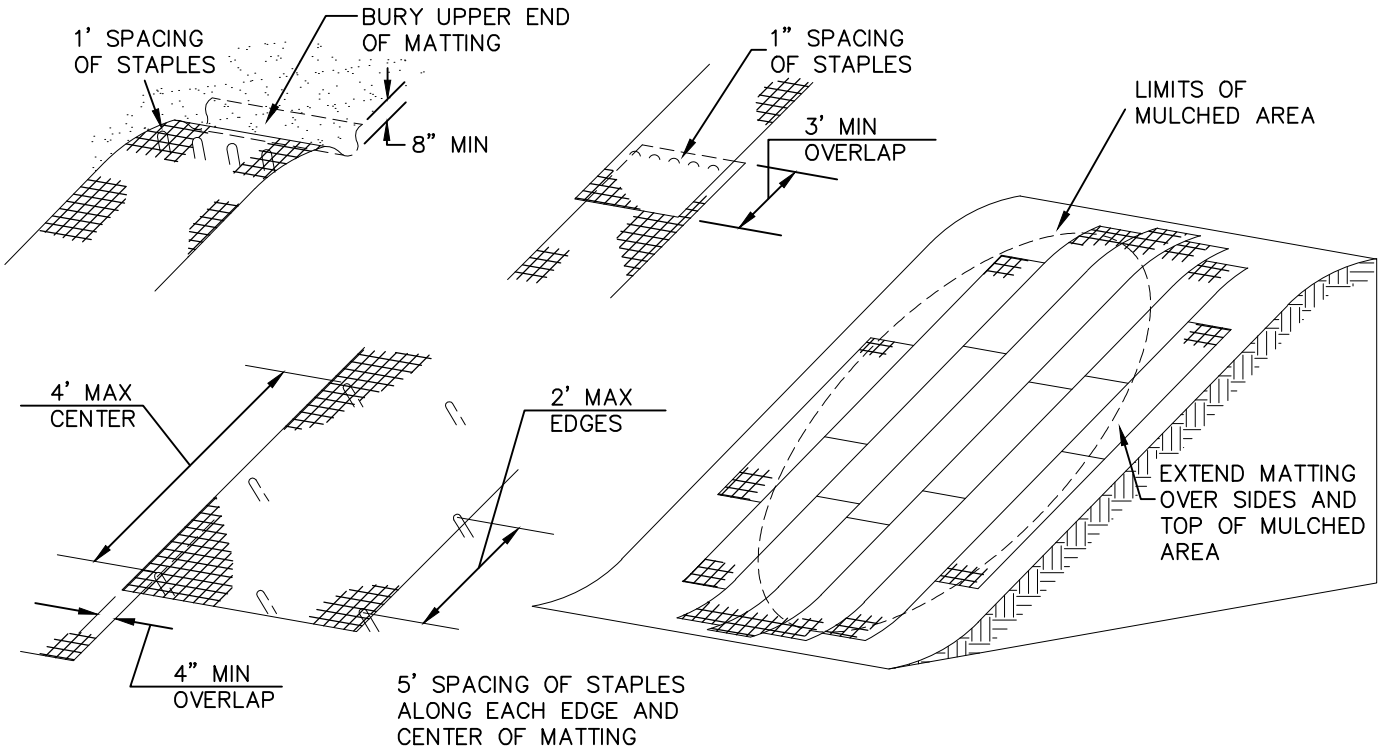

THE SOIL MUST BE REASONABLY SMOOTH. GULLIES AND RILLS MUST BE FILLED AND COMPACTED. ROCKS OR OTHER OBSTRUCTIONS WHICH RISE ABOVE THE LEVEL OF THE SOIL OR MULCH MUST BE REMOVED.

DUE TO THE DIFFICULTY OF PLACING WOOD EXCELSIOR MATTING AND ITS LESS PREDICTABLE RESULTS IN CONTROLLING EROSION, JUTE MATTING IS PREFERRED.

- EXCELSIOR BLANKETS SHALL CONSIST OF MACHINE PRODUCED MATS OR CURLED WOOD EXCELSIOR, 80% OF WHICH HAVE AN 8" OR LONGER FIBER LENGTH. IT SHALL BE OF CONSISTENT THICKNESS WITH THE FIBER EVENLY DISTRIBUTED OVER THE ENTIRE AREA OF THE BLANKET. THE TOP SIDE OF EACH BLANKET SHALL BE COVERED WITH A 3" BY 1" WEAVE OF TWISTED KRAFT PAPER OR BIODEGRADABLE PLASTIC MESH THAT HAS A HIGH WET STRENGTH. BLANKETS SHALL BE FIRE AND SMOLDER RESISTANT AND CONTAIN NO CHEMICAL ADDITIVES. BLANKETS SHALL BE IN 3-FOOT BY 150-FOOT ROLLS OR IN 4-FOOT BY 180-FOOT ROLLS.
- IF THE WOOD EXCELSIOR MAT IS TO BE APPLIED WITHOUT OTHER MULCHES, THE MINIMUM THICKNESS OF MAT SHALL BE 1-1/2".
- IF THE WOOD EXCELSIOR MAT IS TO BE APPLIED OVER OTHER MULCHES, THE MINIMUM THICKNESS SHALL BE 1/2".
- AFTER SITE PREPARATION AND SEEDING (IF ANY), THE ROLLS OF WOOD EXCELSIOR MATTING SHALL BE ROLLED ONTO THE SURFACE FROM THE TOP OF THE SLOPE TO THE BOTTOM OF THE SLOPE, NEVER ALONG THE CONTOUR.
- THE UPPER END OF EACH BLANKET SHALL BE BURIED IN A TRENCH AT LEAST 8" DEEP, AND THE TRENCH SHALL BE BACKFILLED AND TAMPED.
- STAPLES SHALL BE APPLIED AT 2' ON CENTER ALONG THE SIDES OF THE BLANKET AND 4 FEET ON CENTER ALONG THE CENTER OF THE BLANKET.
- BLANKETS PLACED SIDE-TO-SIDE SHALL BE SNUGLY BUTTED TOGETHER TO PREVENT RILLING AND GULLYING ALONG THE JOINT.
- BLANKETS PLACED END-TO-END SHALL BE OVERLAPPED. THE TOP OF THE LOWER BLANKET SHALL BE PLACED IN AN 8" DEEP TRENCH WHICH SHALL THEN BE BACKFILLED AND TAMPED. THE LOWER END OF THE UPPER BLANKET SHALL BE OVERLAPPED ONTO THE LOWER BLANKET, AND STAPLES SHALL BE PLACED THROUGH BOTH BLANKETS.
- STAPLES SHALL BE OF HEAVY GUAGE WIRE, 0.091" IN DIAMETER OR GREATER, WHICH HAVE BEEN BENT INTO A "U" SHAPE, WITH LEGS AT LEAST 8" LONG, AND A 1" CROWN. LONGER STAPLES ARE REQUIRED IN LOOSE OR SANDY SOIL.

4-150

EXCELSIOR MAT INSTALLATION

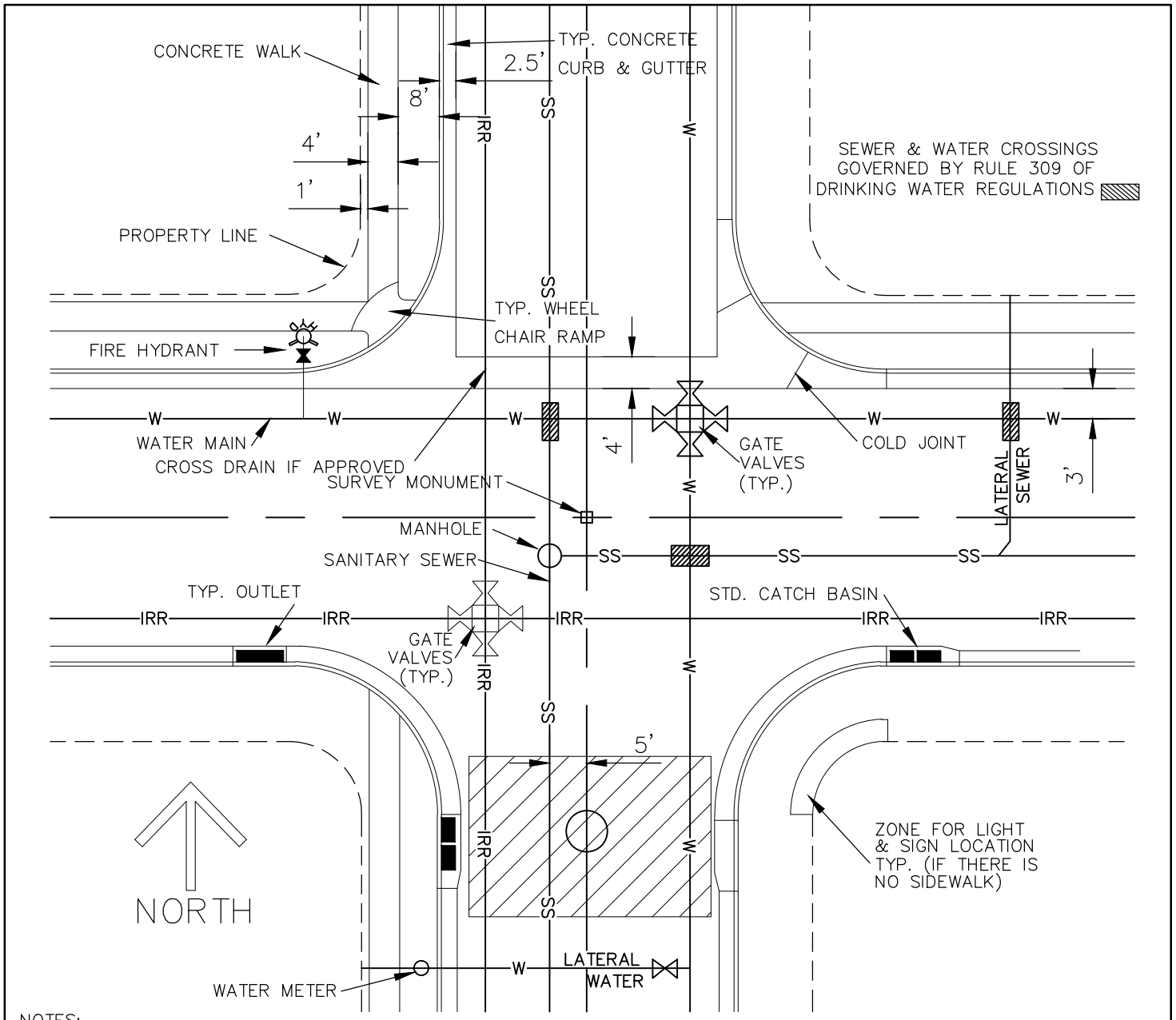

NOTES:

1. SANITARY SEWER LINES MAY VARY FROM THE LOCATION SHOWN. IN NO CASE SHALL THE SANITARY SEWER OR LATERAL BE LAID LESS THAN 10 FEET FROM A PARALLELING POTABLE WATER LINE (INCLUDING SERVICE LINE). ALL SEWER LINES AND MANHOLES SHALL BE INSTALLED AT A MINIMUM OF 4 FEET FROM THE EDGE OF ALL CURBS AND GUTTERS WHEREVER POSSIBLE. SANITARY SEWER LINES SHALL BE INSTALLED ON THE WEST AND SOUTH SIDE OF STREET.
2. WHEN A SANITARY SEWER AND WATER LINE CROSS, THE TOP OF THE SANITARY SEWER SHALL BE NO LESS THAN 18 INCHES BELOW THE BOTTOM OF THE WATER LINE. SEE RULE 309-211 OF UTAHS PUBLIC DRINKING WATER REGULATIONS.
3. WATER VALVES AND FIRE HYDRANTS SHALL BE LOCATED AS APPROVED BY THE CITY (5 FOOT MINIMUM SEPARATION BETWEEN WATER LINE AND ANY OTHER UTILITY).
4. NO POTABLE WATER LINE SMALLER THAN 8 INCH DIAMETER SHALL BE INSTALLED WITHOUT APPROVABLE OF THE CITY. NO WATER CONNECTION SHALL BE MADE WITHOUT APPROVAL OF THE CITY.
5. NO PRESSURE IRRIGATION MAIN SMALLER THAN 6 INCH DIAMETER SHALL BE INSTALLED.
6. CURB AND GUTTER ON BOTH SIDES OF THE STREET WILL BE REQUIRED BY THE CITY.
7. SIDEWALK ON BOTH SIDES OF THE STREET WILL BE REQUIRED BY THE CITY.

5-27

TYPICAL INTERSECTION LOCATIONS FOR UTILITIES

REV. 04-07

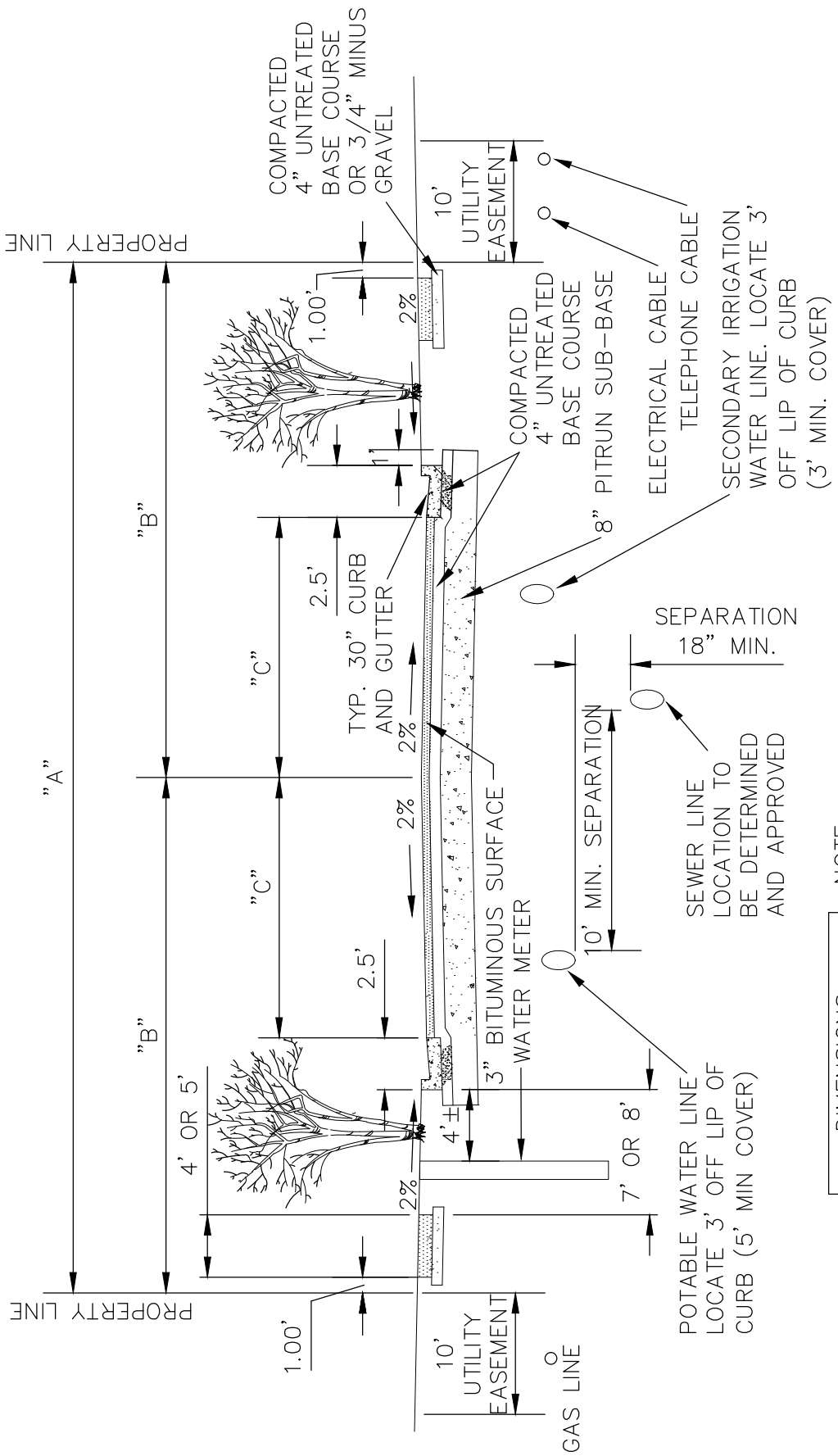

NOTE:
WIDTH OF SIDEWALK SHALL
BE 5 FEET ON 99 FOOT
WIDE STREET

DIMENSIONS		
"A"	"B"	"C"
68.00'	34.00'	18.50'
99.00'	49.50'	33.00'

TYPICAL STREET CROSS SECTION FOR NEW CONSTRUCTION
WITH CURB & GUTTER

5-28

TYPICAL STREET CROSS SECTION

REV. JAN. 03

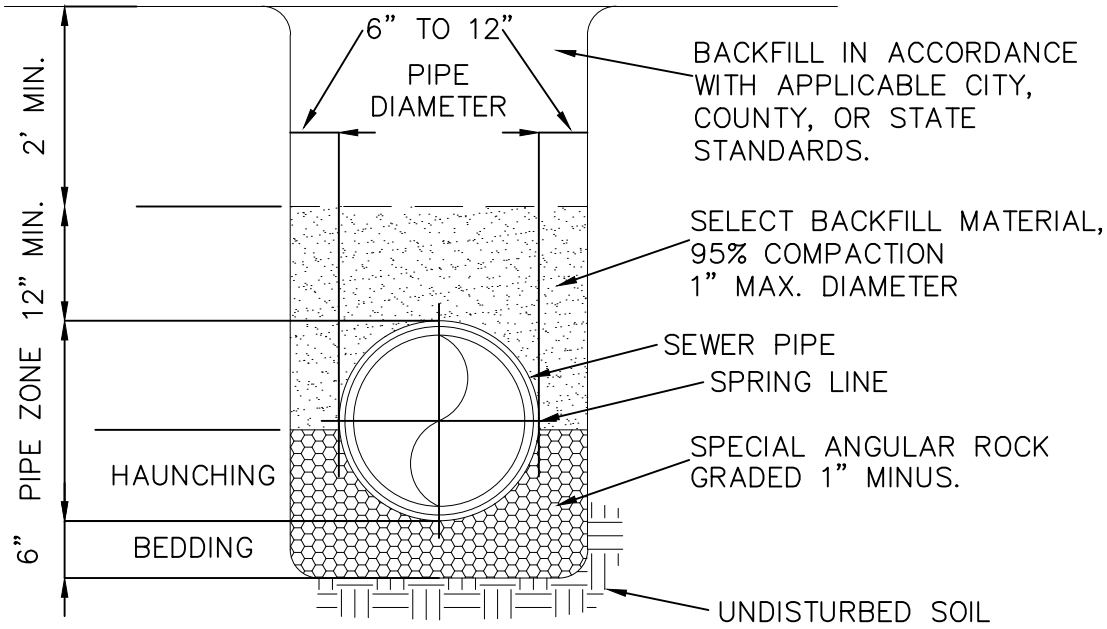

FLEXIBLE AND RIGID PIPE ON UNSUITABLE SUBGRADE

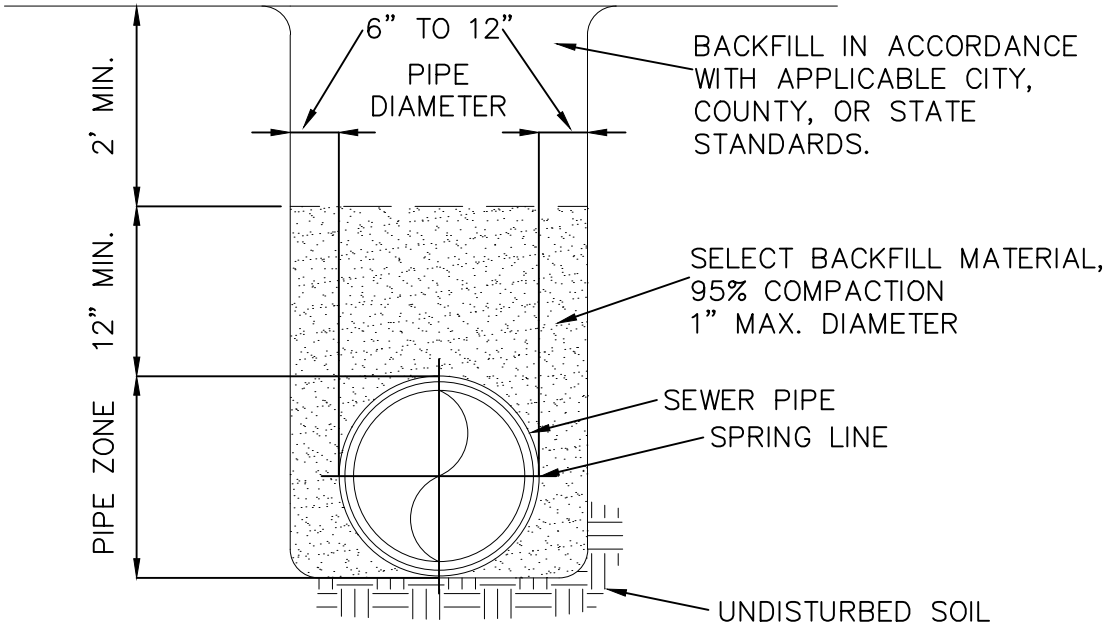

RIGID PIPE ON SUITABLE SUBGRADE

PIPE INSTALLATION DETAIL

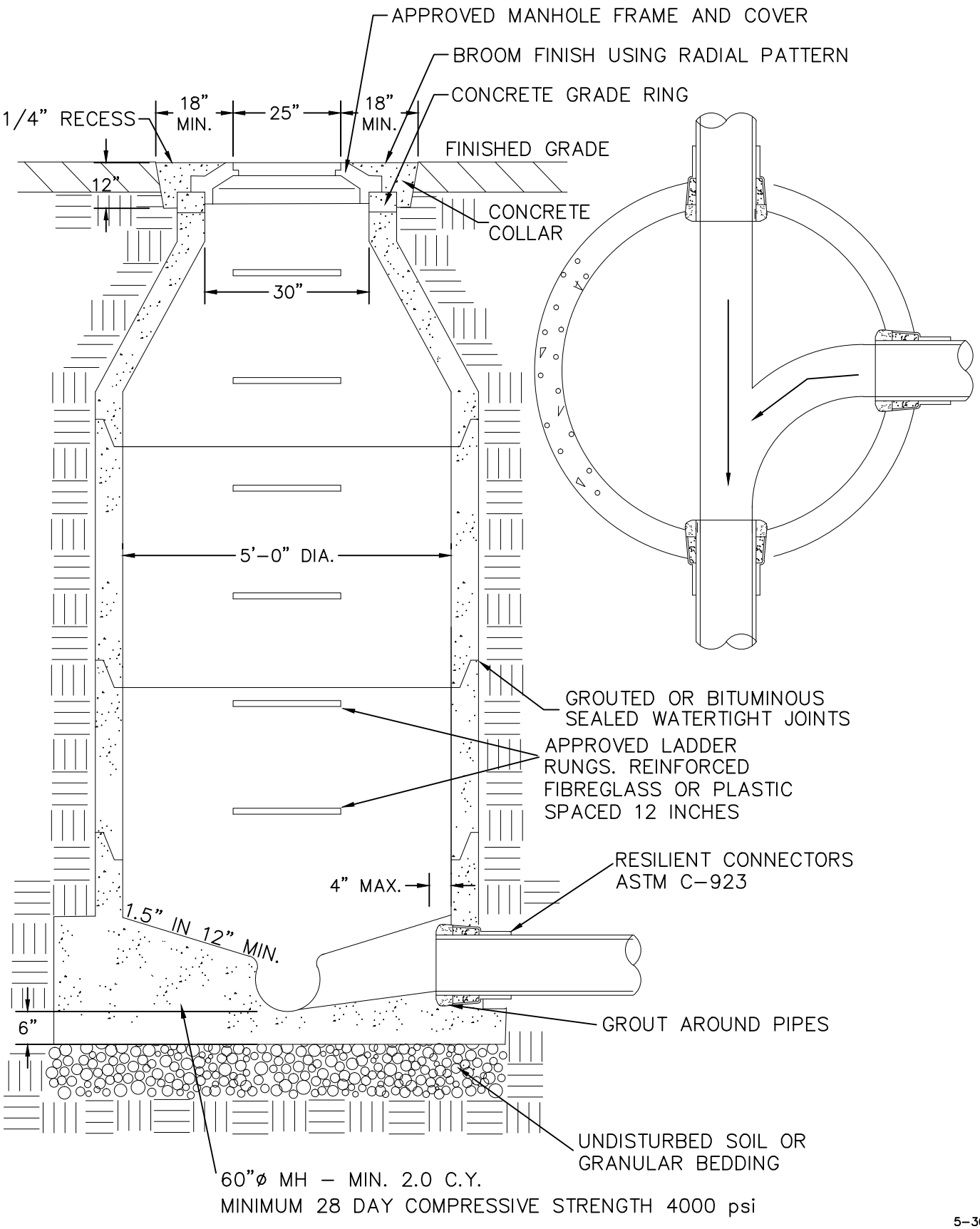

5-30

PRECAST MANHOLE

REV. 07-08

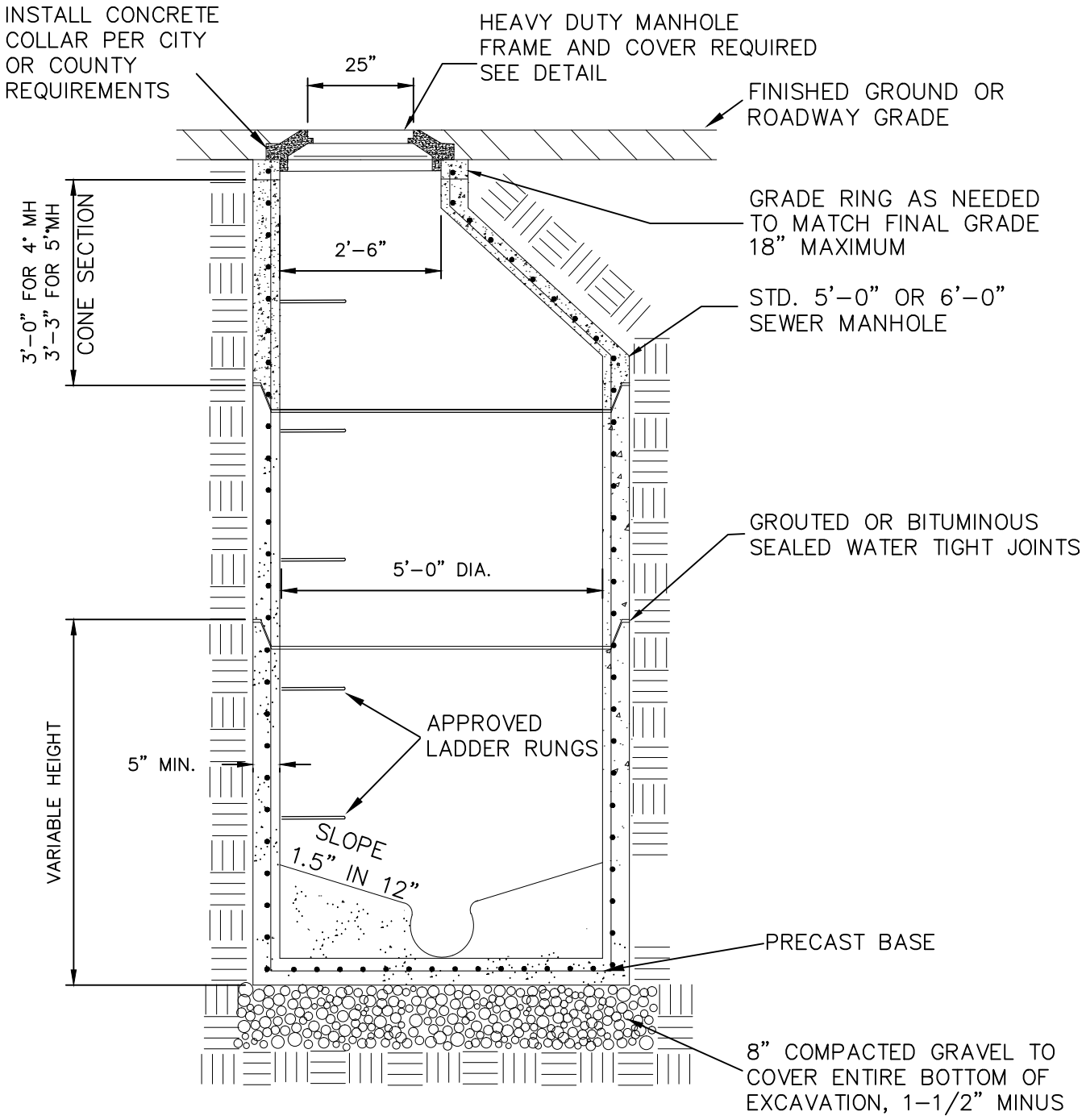

5-31

PRECAST REINFORCED CONCRETE MANHOLE

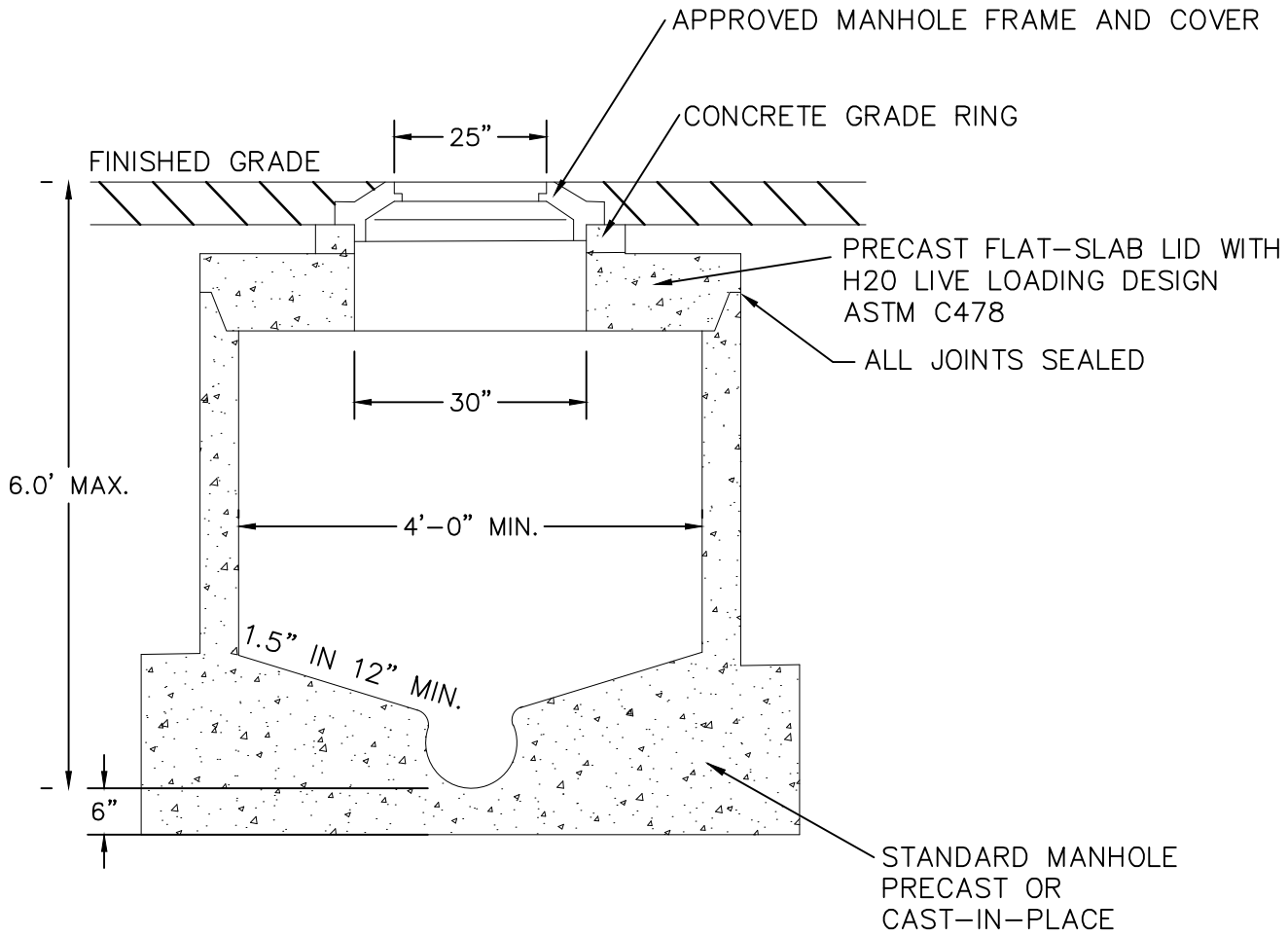

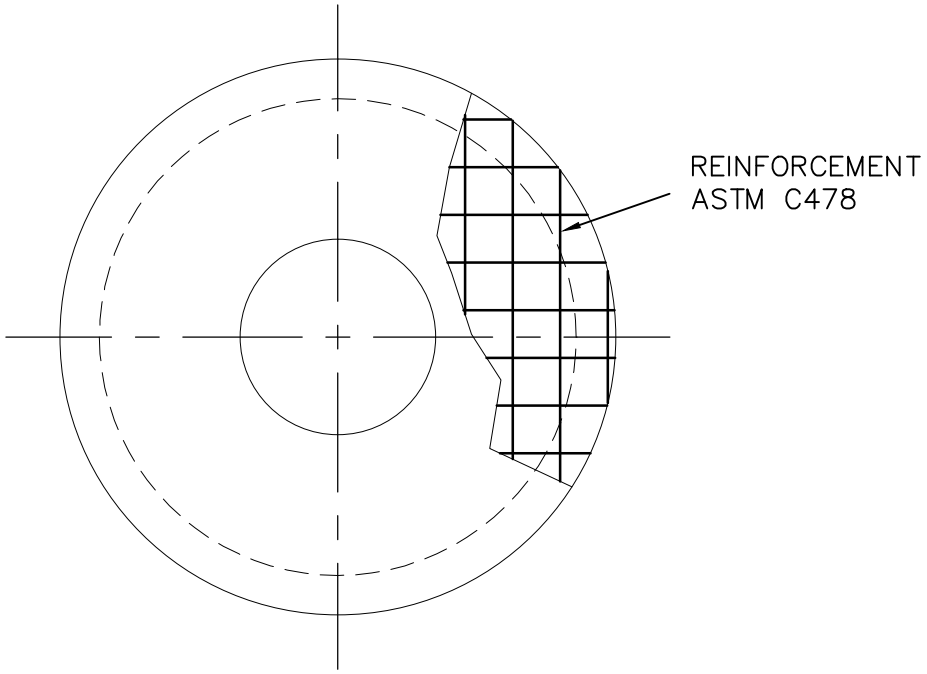

NOTE: TO BE USED ONLY WHEN APPROVED BY CITY ENGINEER

5-32

SHALLOW MANHOLE

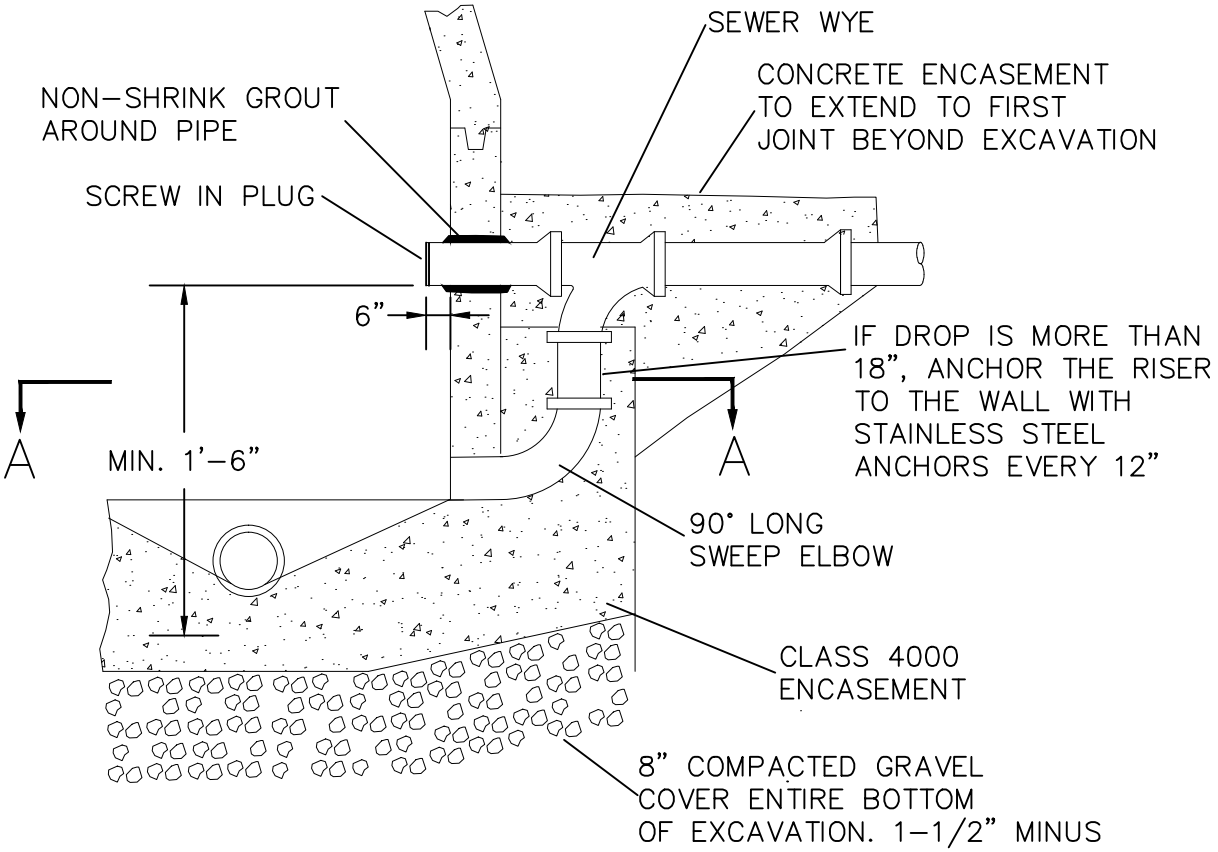

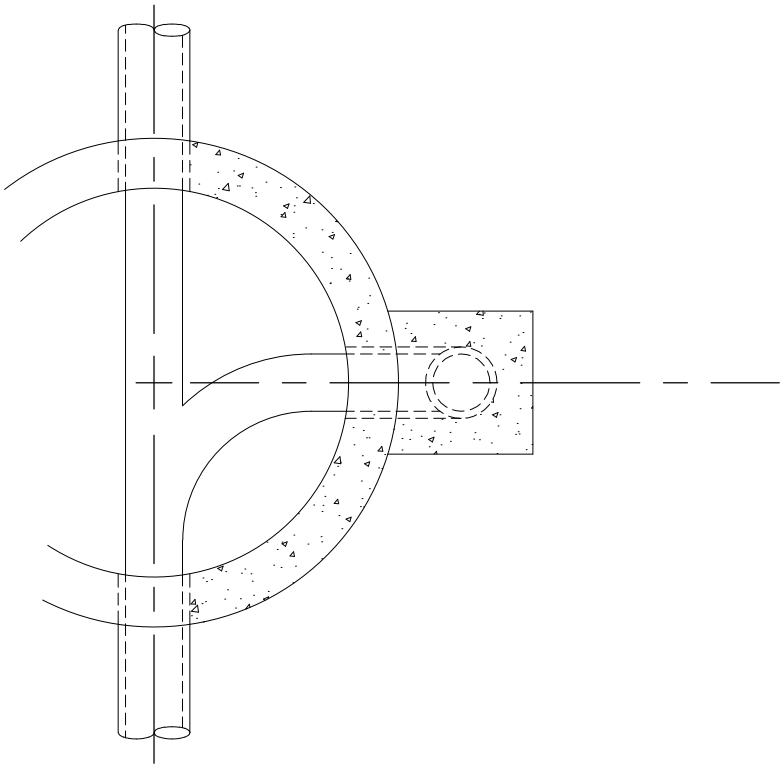

SECTION A-A

5-34

DROP MANHOLE CONNECTION

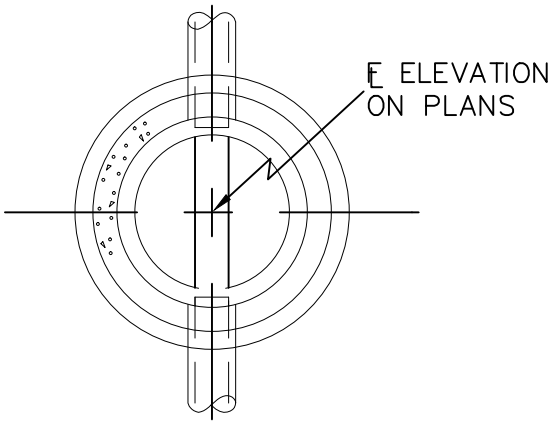

TYPICAL INVERT

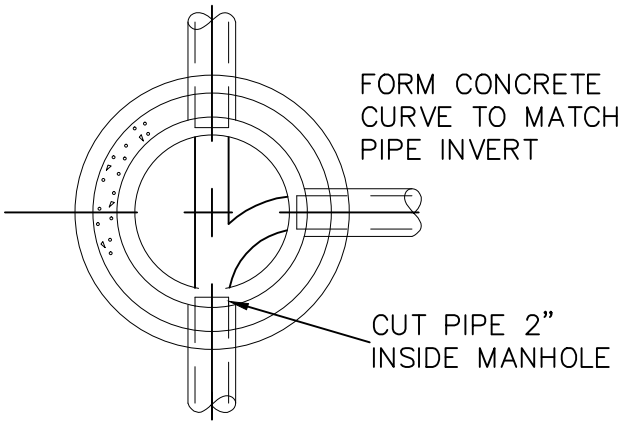

TYPICAL INVERT FOR
PIPE INTERSECTIONS

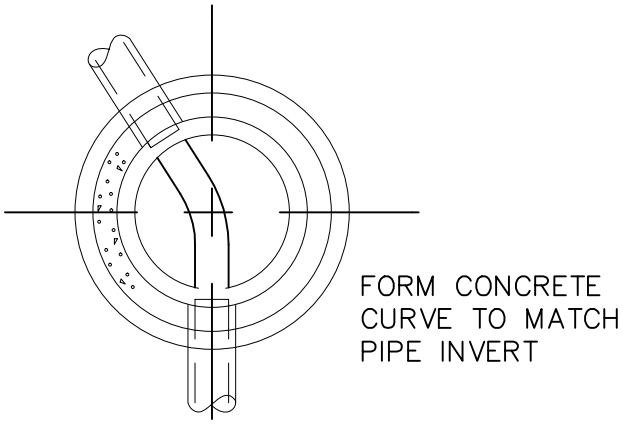

TYPICAL INVERT FOR
HORIZONTAL DEFLECTION

PIPE INTERSECTIONS

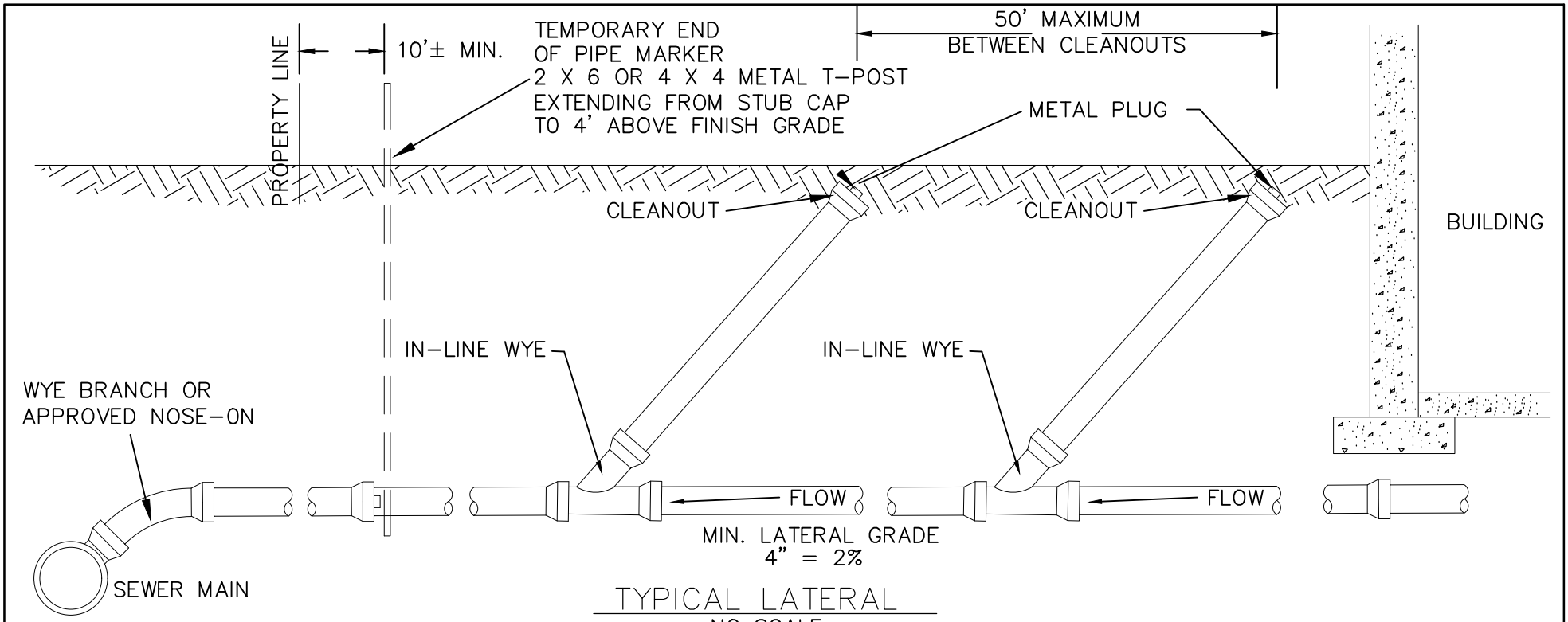

TYPICAL LATERAL

NO SCALE

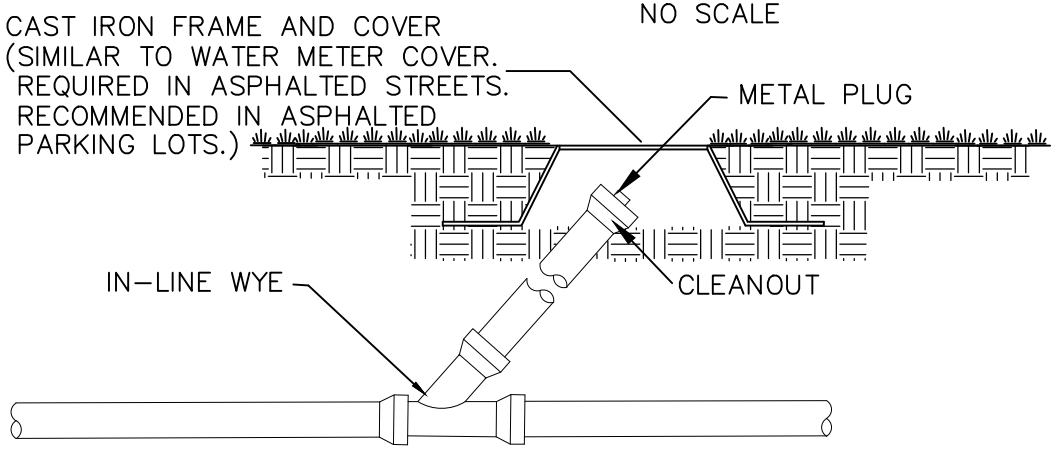

NOTE:

A MINIMUM OF 6 INCHES OF BEDDING MATERIAL WILL BE REQUIRED. THIS MATERIAL SHALL BE 1/4" TO 1" CLEAN ANGULAR ROCK.

MID-LATERAL CLEANOUT

NO SCALE

5-36

SANITARY SEWER SERVICE CONNECTION

REV. 04-07

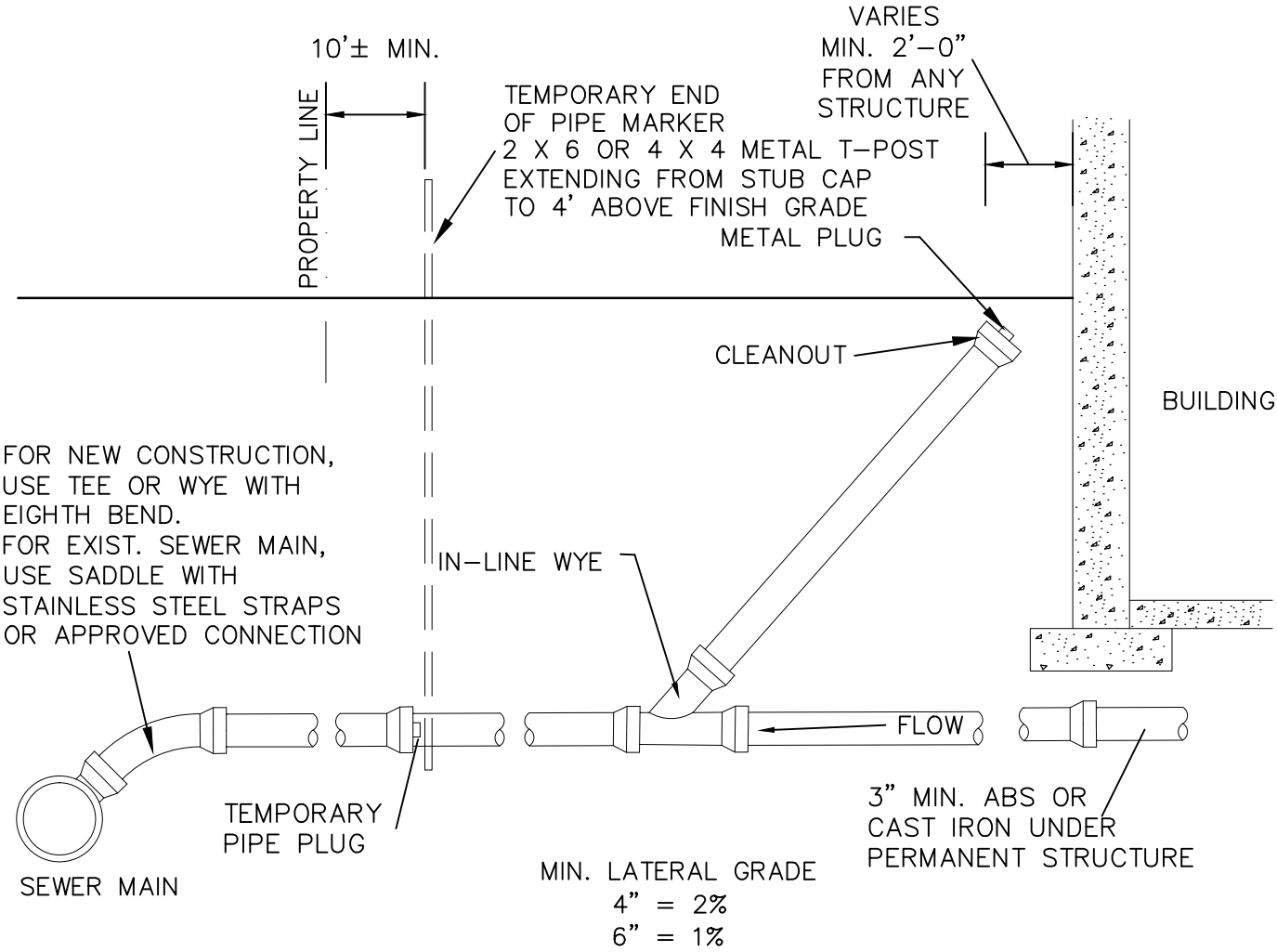

TYPICAL LATERAL
NO SCALE

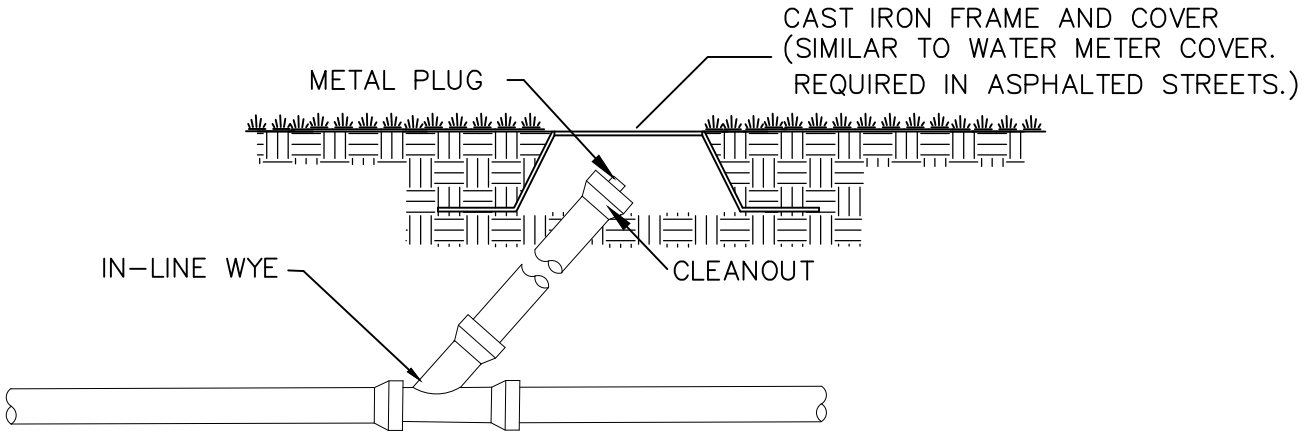

MID-LATERAL CLEANOUT
NO SCALE

5-37

SANITARY SEWER SERVICE CONNECTION

REV. 04-07

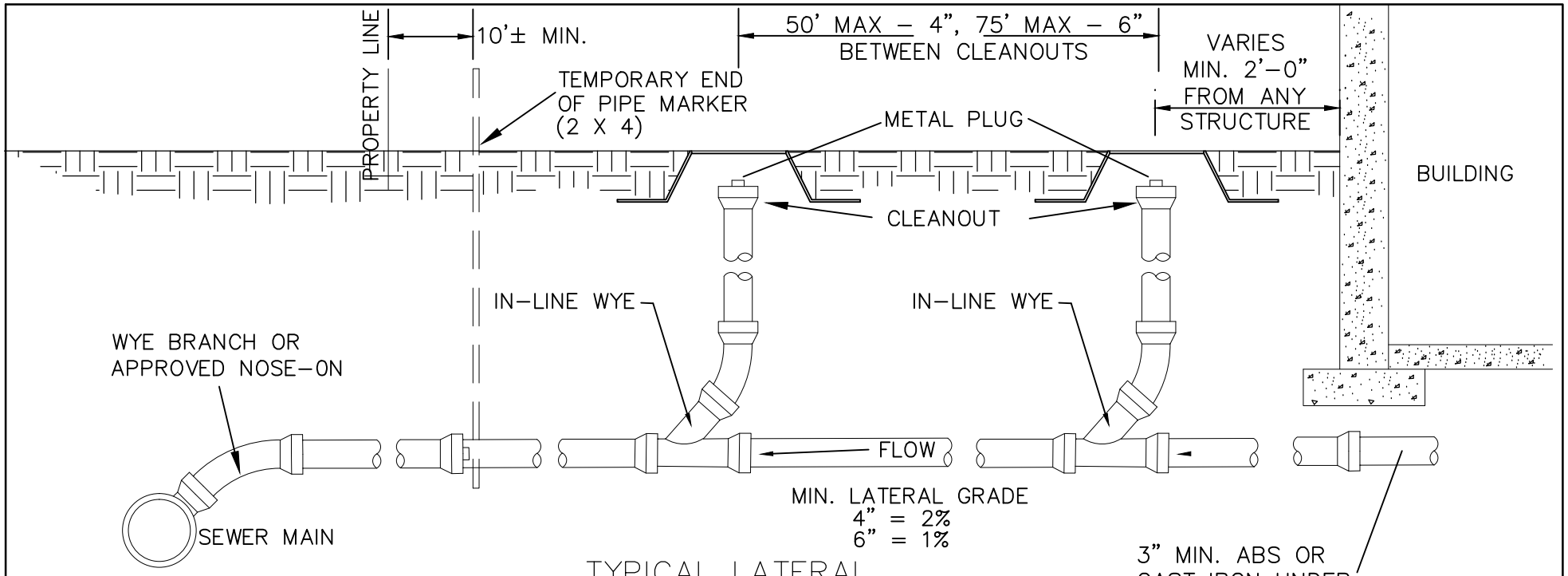

TYPICAL LATERAL

NO SCALE

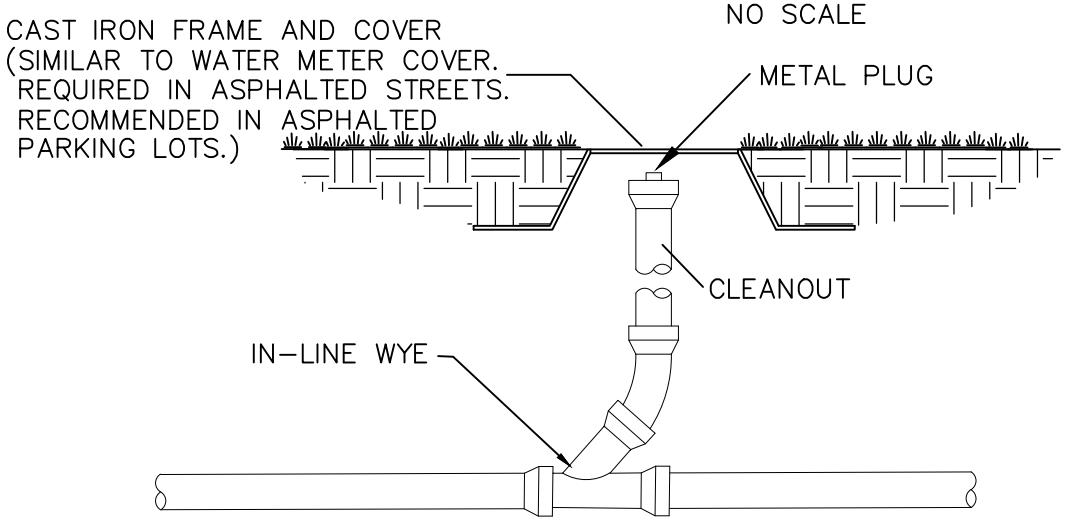

NOTE:

A MINIMUM OF 6 INCHES OF BEDDING MATERIAL WILL BE REQUIRED. THIS MATERIAL SHALL BE 1/4" TO 1" CLEAN ANGULAR ROCK.

MID–LATERAL CLEANOUT

NO SCALE

5–38
REV. 1–06

SANITARY SEWER SERVICE CONNECTION – VERTICAL RISER

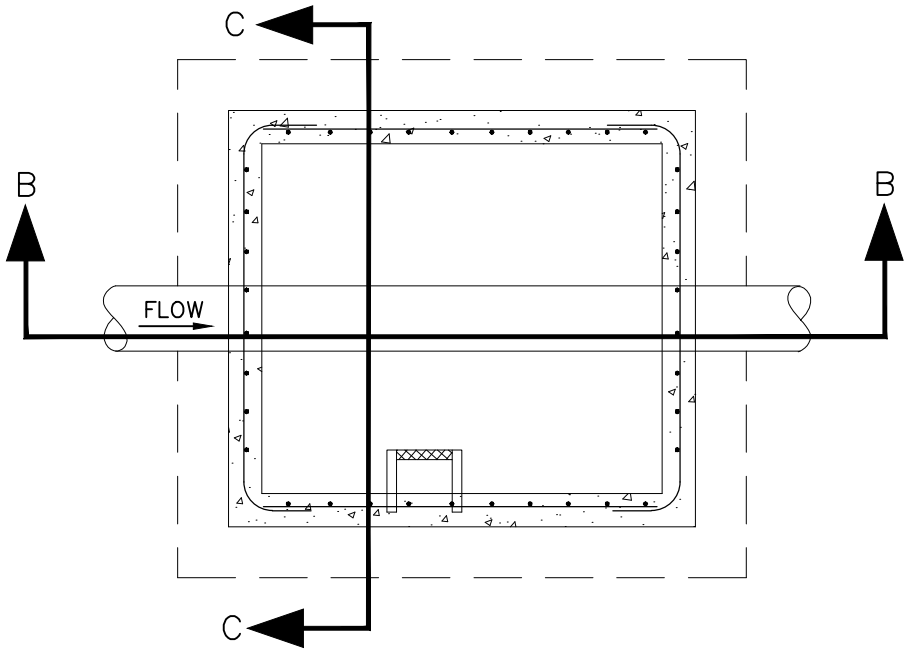

PLAN VIEW

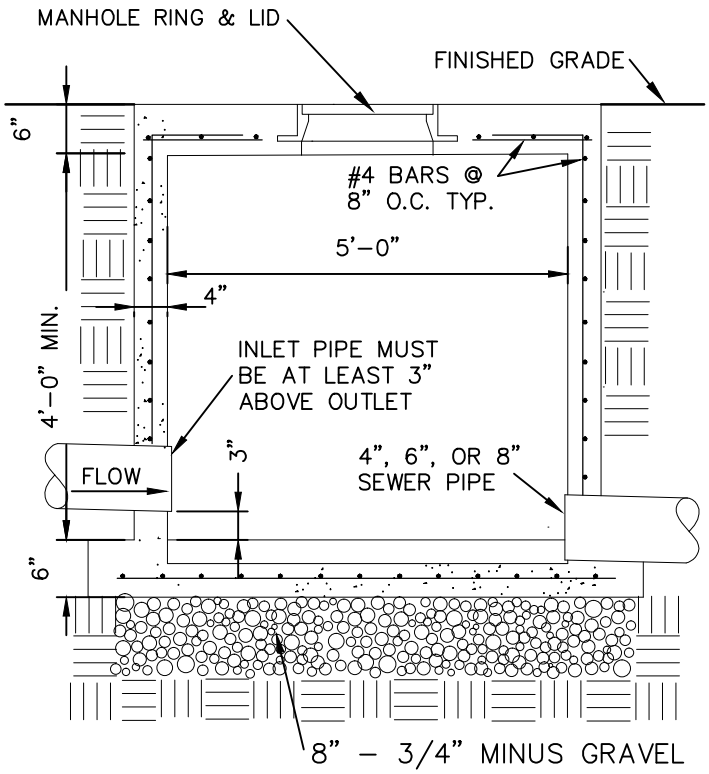

SECTION BB

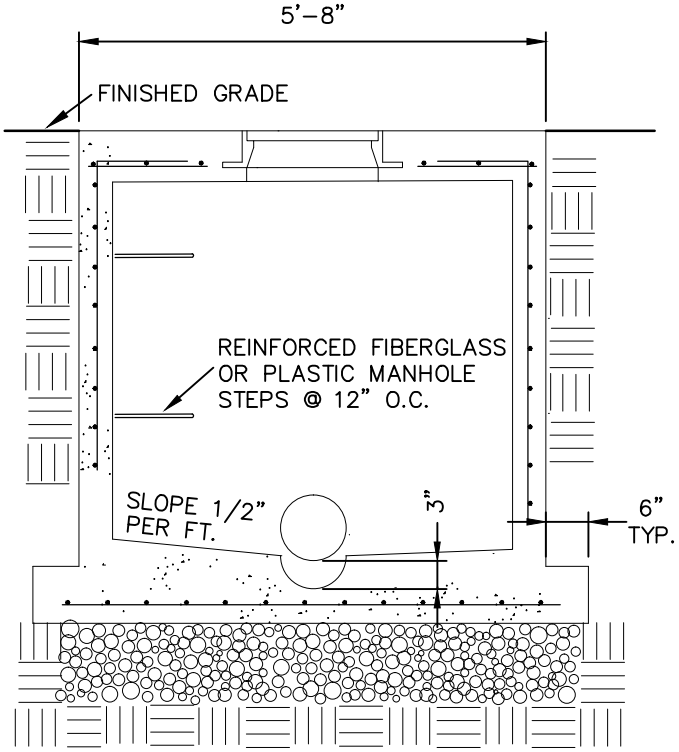

SECTION CC

5-39

SAMPLING MANHOLE

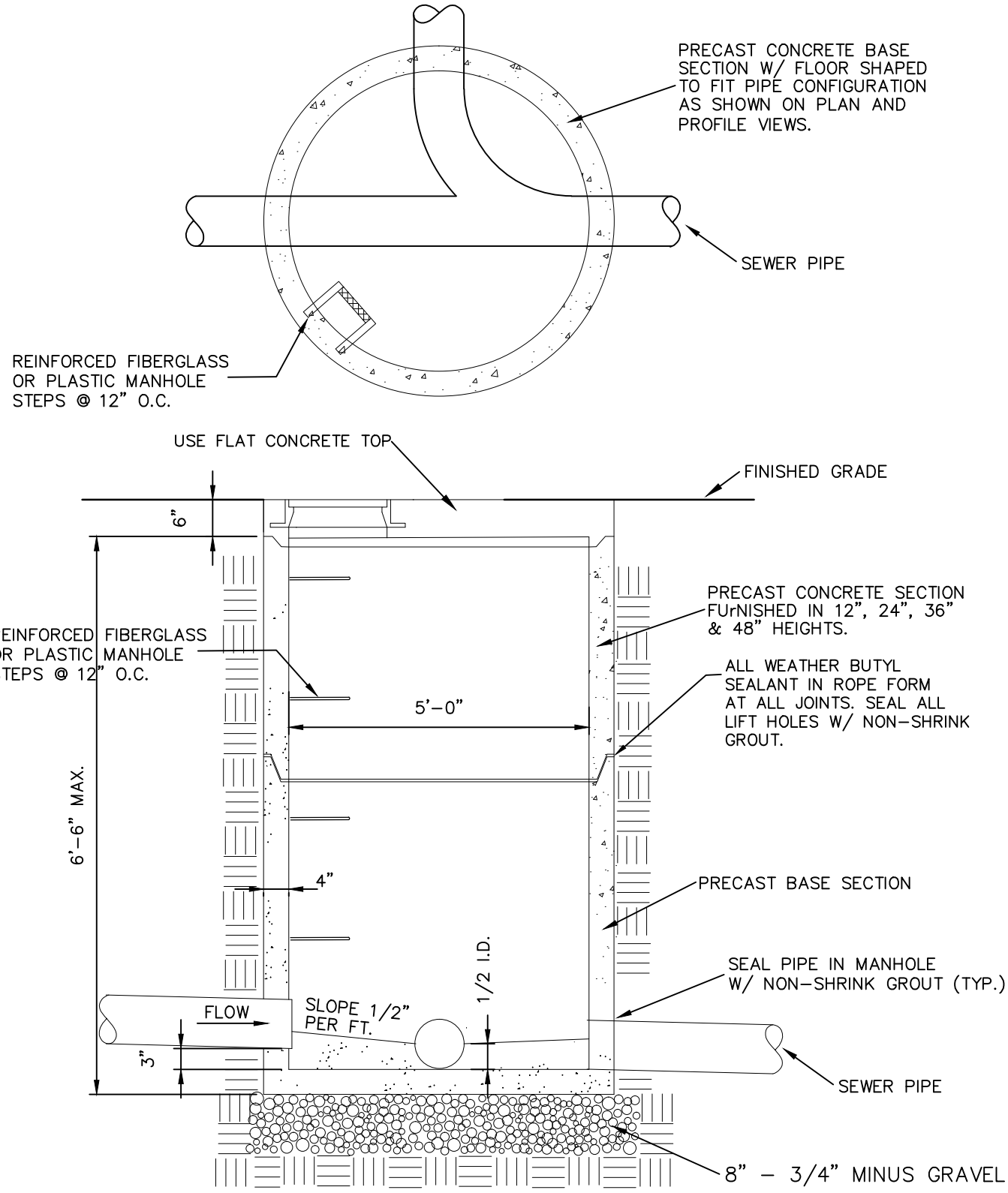

NOTES: 1. CONCRETE SHALL HAVE A MINIMUM 28 DAY COMPRESSIVE STRENGTH OF 4000 psi.

2. REINFORCEMENT STEEL SHALL BE ASTW A615 GRADE 60.

5-40

SAMPLING MANHOLE, 4' TO 7' DEEP

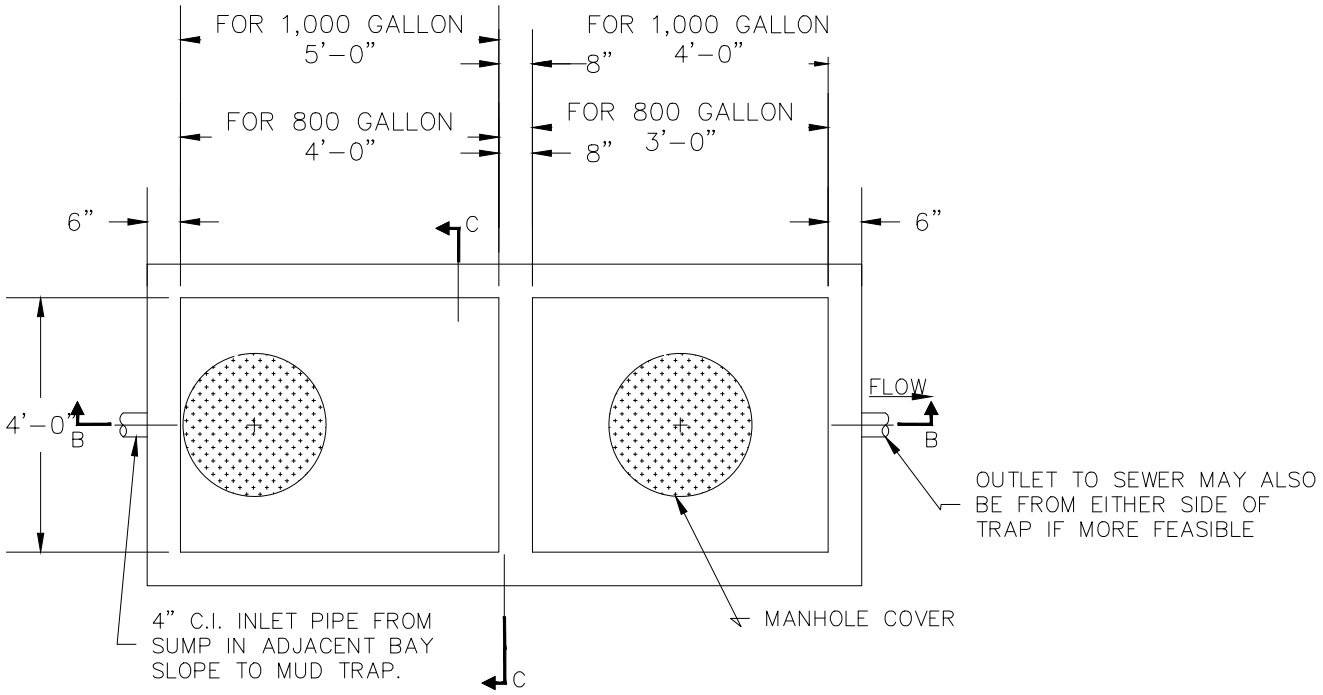

A PLAN – GREASE TRAP TANK

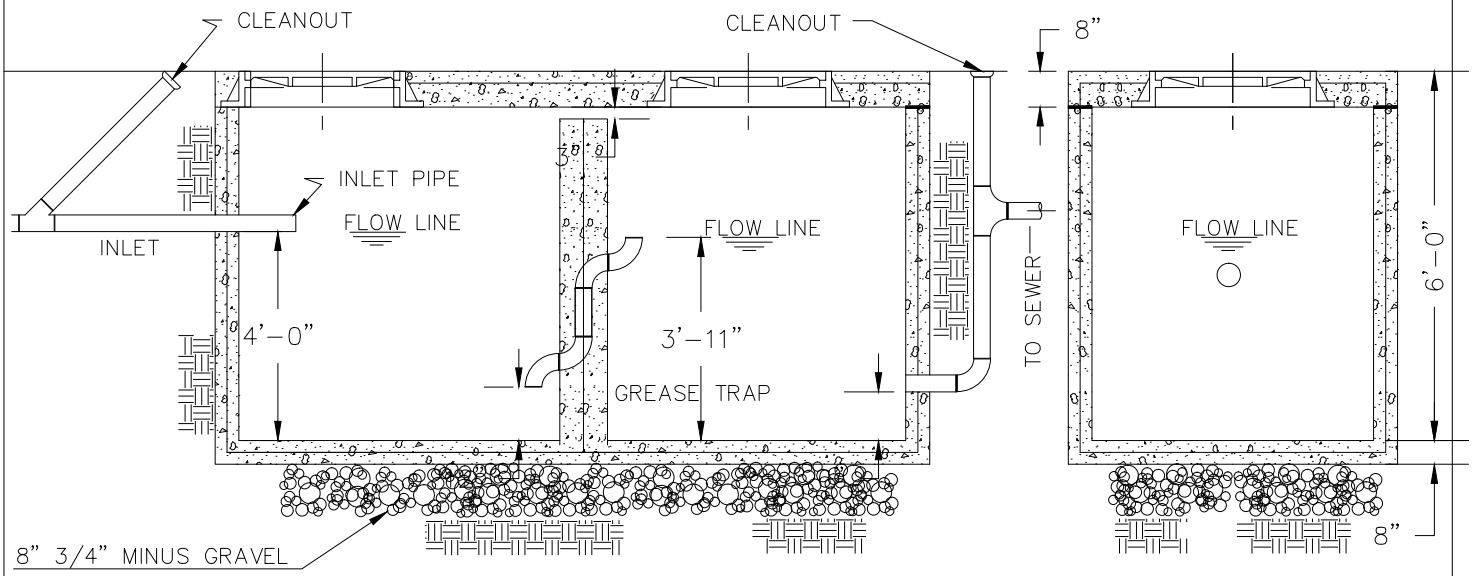

B SECTION – GREASE TRAP TANK

SECTION C–C

GREASE INTERCEPTOR

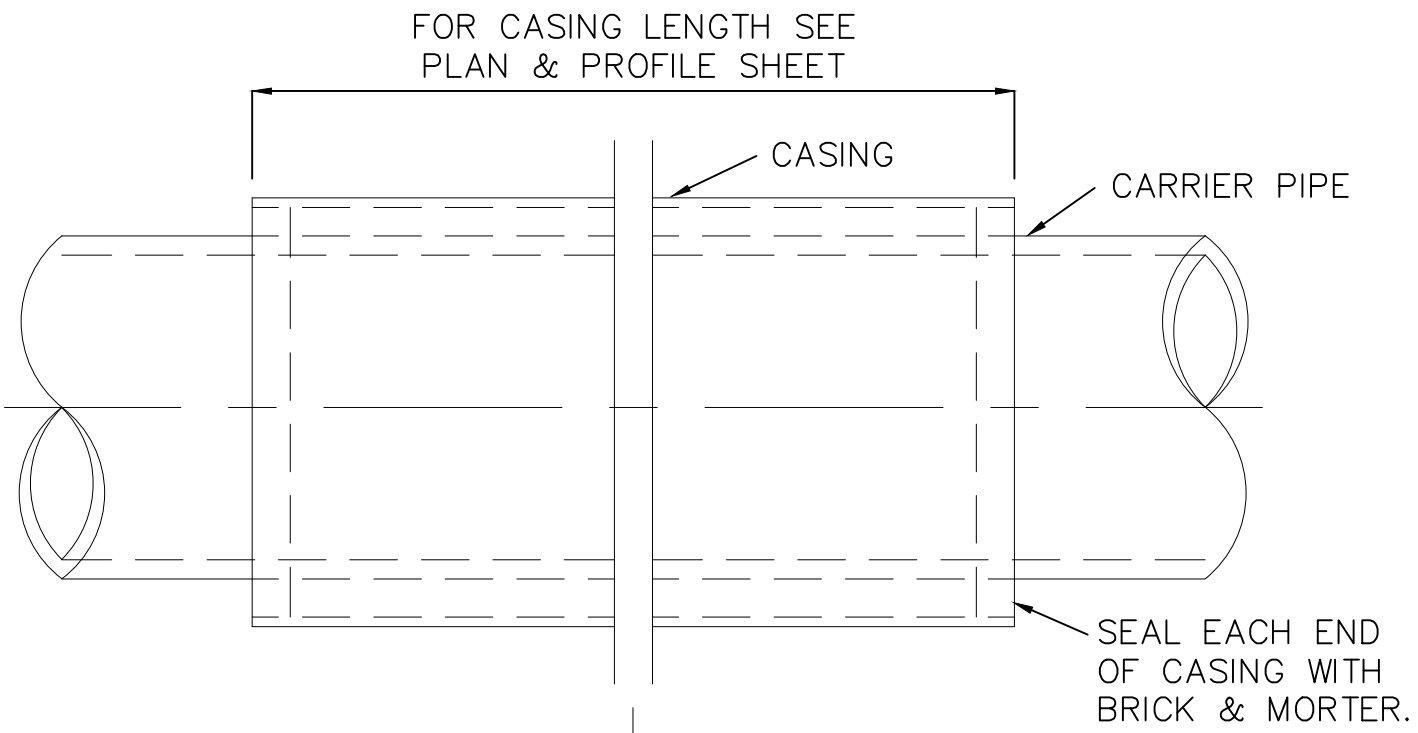

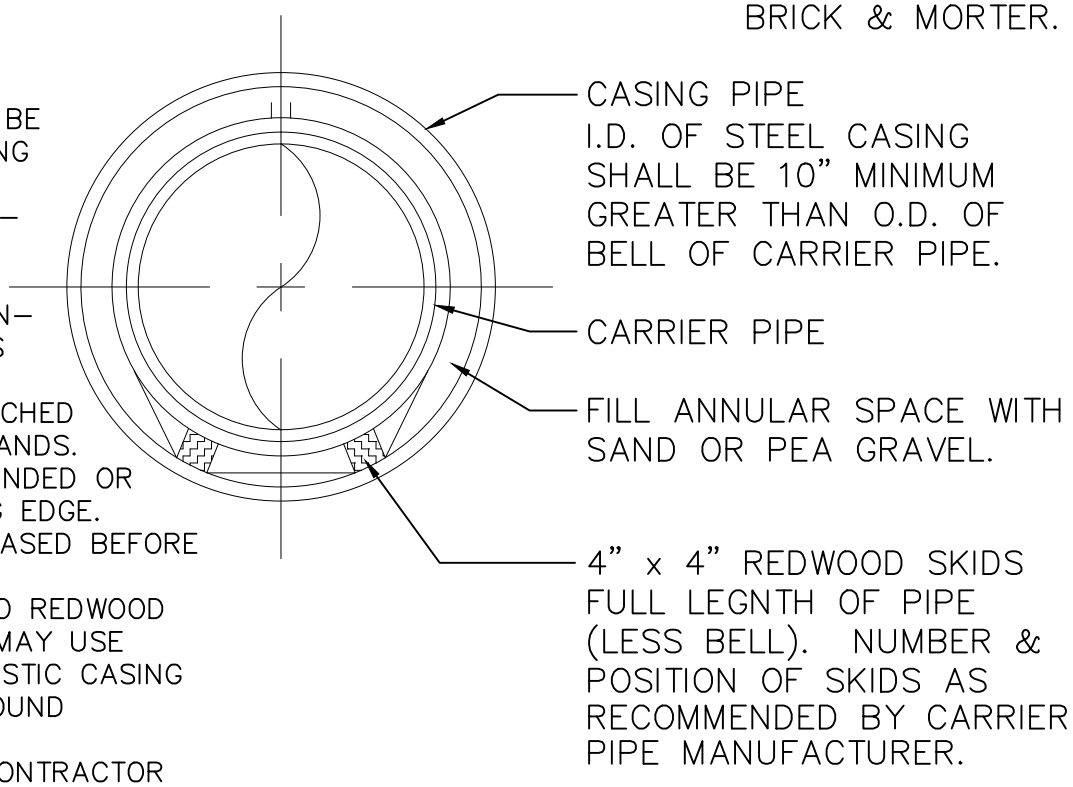

NOTES;

1. CARRIER PIPE SHALL BE TESTED BEFORE FILLING CASING WITH SAND.
2. SKIDS SHALL BE SECURELY ATTACHED TO CARRIER PIPE WITH STEEL BANDS. A MINIMUM OF TWO BANDS PER SKID.
3. SKIDS SHALL BE NOTCHED TO RECEIVE STEEL BANDS.
4. SKIDS SHALL BE ROUNDED OR BEVELED ON LEADING EDGE.
5. SKIDS SHALL BE GREASED BEFORE INSTALLATION.
6. AS AN ALTERNATE TO REDWOOD SKIDS CONTRACTOR MAY USE PREFABFRICATED PLASTIC CASING SKIDS ATTACHED AROUND CARRIER PIPE.
7. AS AN ALTERNATE CONTRACTOR MAY USE A STANDARD PULL-ON WRAP-AROUND SYNTHETIC END SEAL.
8. CASING PIPE SHALL BE SMOOTH STEEL WITH MINIMUM YIELD STRENGTH = 35,000 P.S.I.
9. METHOD OF INSTALLATION OF CARRIER PIPE IN CASING SHALL BE AS RECOMMENDED BY CARRIER PIPE MANUFACTURER.

PLATE THICKNESS OF CASING PIPE

DIAMETER	TO 12"	15" TO 27"
MINIMUM THICKNESS	1/4"	3/8"

5-42

BORING & STEEL CASING DETAIL

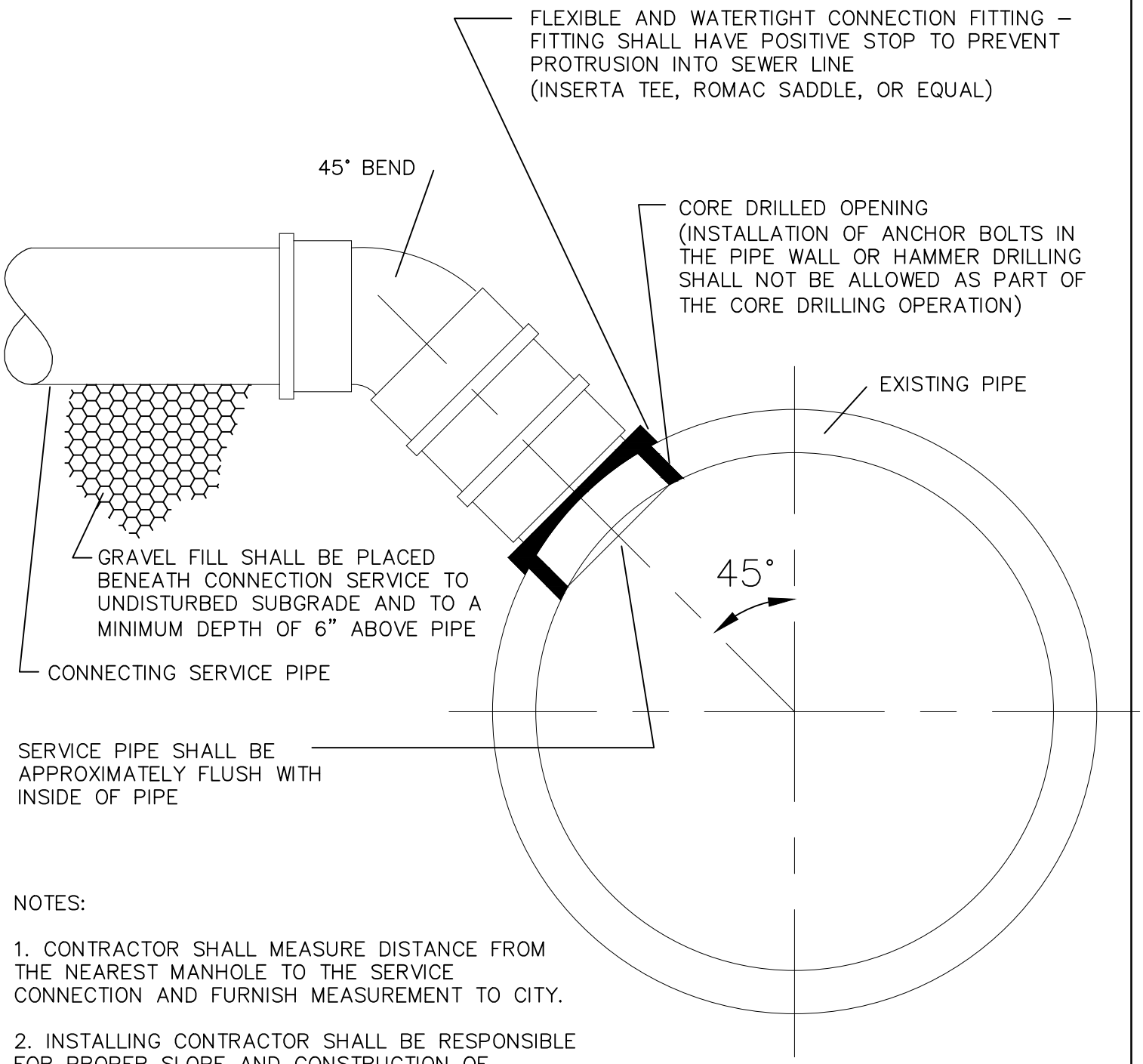

NOTES:

1. CONTRACTOR SHALL MEASURE DISTANCE FROM THE NEAREST MANHOLE TO THE SERVICE CONNECTION AND FURNISH MEASUREMENT TO CITY.

2. INSTALLING CONTRACTOR SHALL BE RESPONSIBLE FOR PROPER SLOPE AND CONSTRUCTION OF CONNECTING SERVICE PIPELINE.

3. INSTALLING CONTRACTOR SHALL BE RESPONSIBLE FOR PROTECTION OF EXISTING SEWER AND OTHER UTILITIES, PROPER BACKFILLING, COMPACTING AND PAVEMENT RESTORATION.

4. CONTRACTOR SHALL NOTIFY CITY 24 HOURS BEFORE INSTALLATION BEGINS.

5. CONTRACTOR SHALL GUARANTEE WORK FOR A PERIOD OF ONE YEAR.

5–43

LATERAL CONNECTION TO EXISTING LINE

REV. 1–06

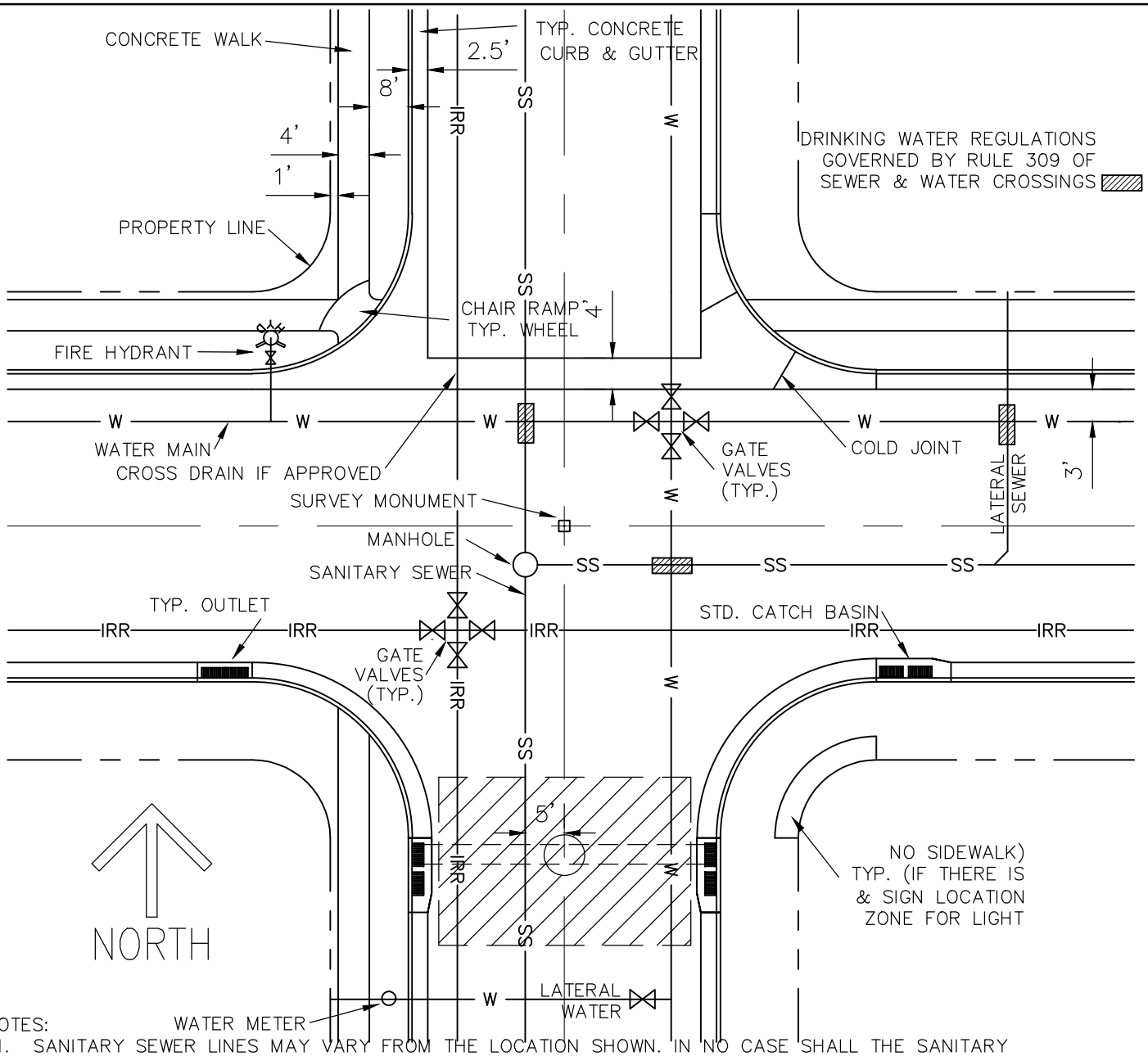

NOTES:

1. SANITARY SEWER LINES MAY VARY FROM THE LOCATION SHOWN. IN NO CASE SHALL THE SANITARY SEWER OR LATERAL BE LAID LESS THAN 10 FEET FROM A PARALLELING POTABLE WATER LINE (INCLUDING SERVICE LINES). ALL SEWER LINES AND MANHOLES SHALL BE INSTALLED AT A MINIMUM OF 4 FEET FROM THE EDGE OF ALL CURBS AND GUTTERS WHEREVER POSSIBLE. SANITARY SEWER LINES SHALL BE INSTALLED ON THE WEST AND SOUTH SIDE OF STREET.

2. WHEN A SANITARY SEWER AND A WATER LINE CROSS, THE TOP OF THE SANITARY SEWER SHALL BE NO LESS THAN 18 INCHES BELOW THE BOTTOM OF THE WATER LINE. SEE RULE 309-211 OF UTAH'S PUBLIC DRINKING WATER REGULATIONS.

3. WATER VALVES AND FIRE HYDRANTS SHALL BE LOCATED AS APPROVED BY THE CITY (5 FOOT MINIMUM SEPARATION BETWEEN WATER LINE AND ANY OTHER UTILITY).

4. NO POTABLE WATER LINE SMALLER THAN 8 INCH DIAMETER SHALL BE INSTALLED WITHOUT APPROVAL OF THE CITY. NO WATER CONNECTION SHALL BE MADE WITHOUT APPROVAL OF THE CITY.

5. NO PRESSURE IRRIGATION MAIN SMALLER THAN 6 INCH DIAMETER SHALL BE INSTALLED.

6. CURB AND GUTTER ON BOTH SIDES OF THE STREET WILL BE REQUIRED BY THE CITY.

7. SIDEWALK ON BOTH SIDES OF THE STREET WILL BE REQUIRED BY THE CITY.

6-39

TYPICAL INTERSECTION LOCATIONS FOR UTILITIES

REV. 04-07

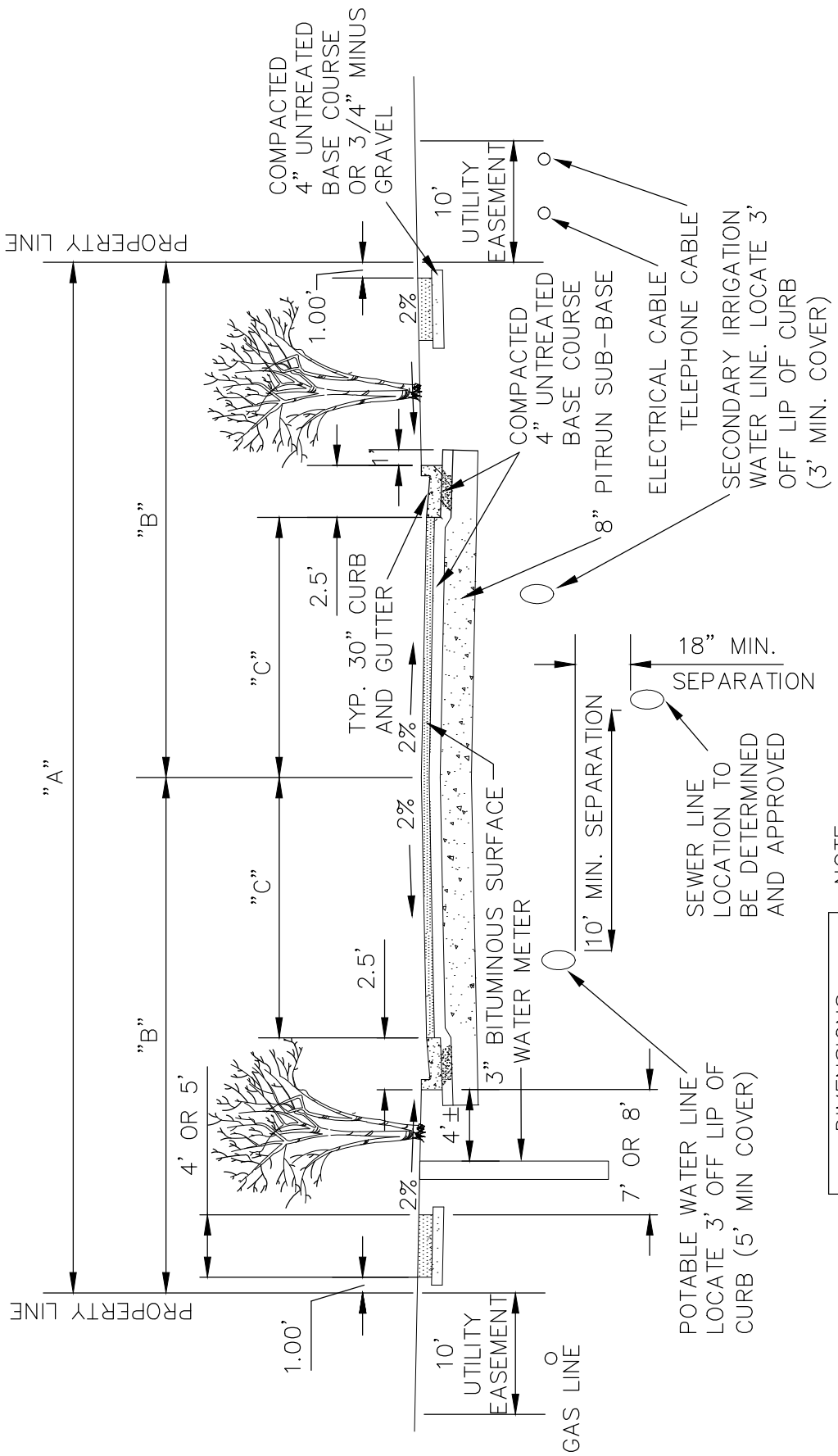

NOTE:
WIDTH OF SIDEWALK SHALL BE 5 FEET ON 99 FOOT WIDE STREET

DIMENSIONS		
"A"	"B"	"C"
68.00'	34.00'	18.50'
99.00'	49.50'	33.00'

TYPICAL STREET CROSS SECTION FOR NEW CONSTRUCTION WITH CURB & GUTTER

6-40

TYPICAL STREET CROSS SECTION

REV. JAN. 03

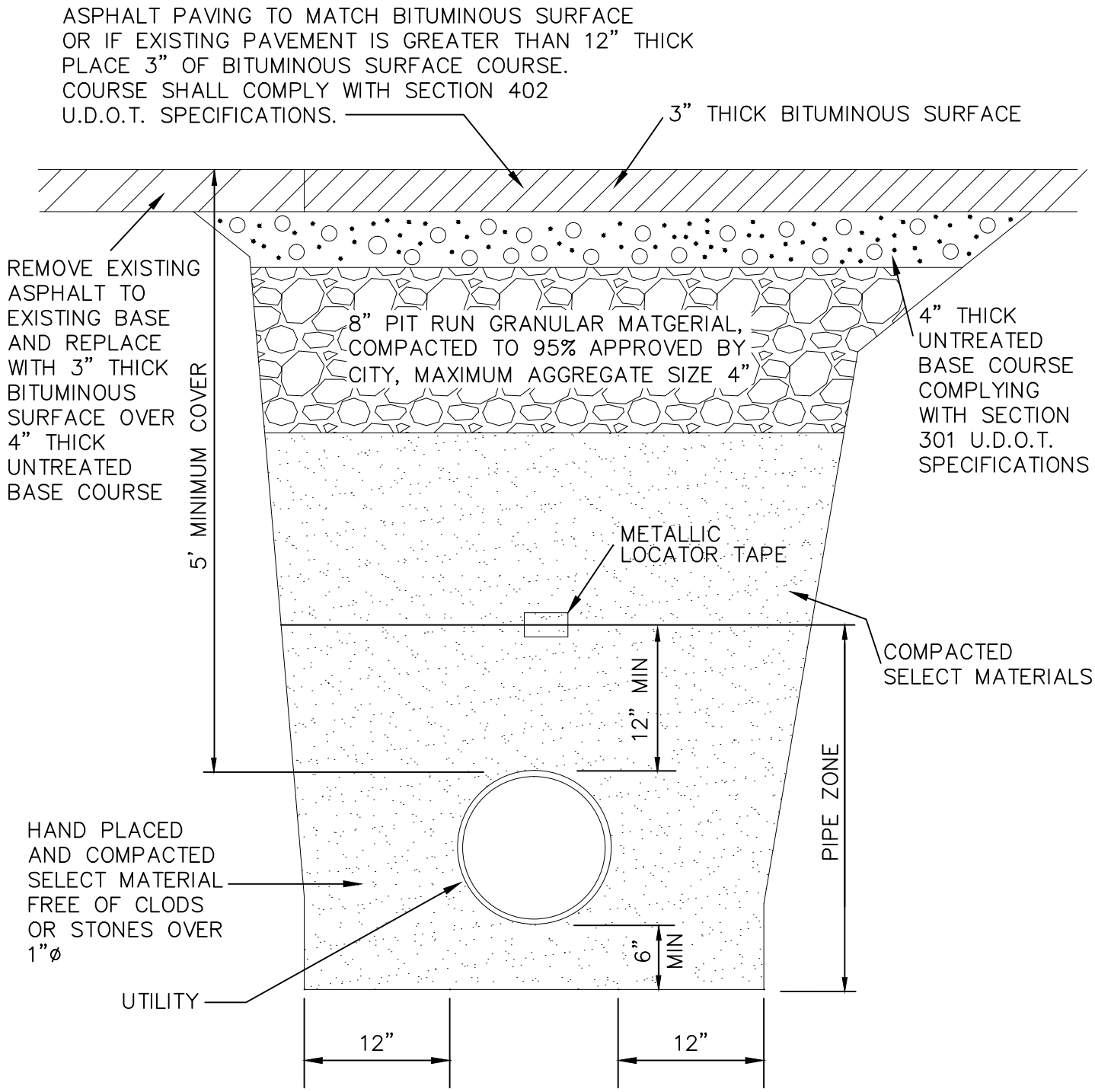

LOCATED IN SURFACED ROAD

6–41

UTILITY TRENCH

REV. 04–07

NOTE:
FOR TEE, PROVIDE THRUST BLOCKING FOR BRANCH SIZE.

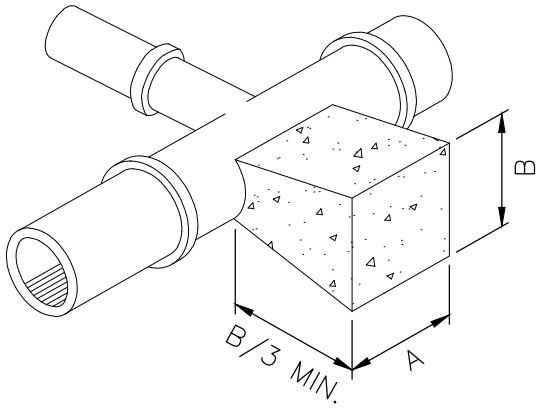

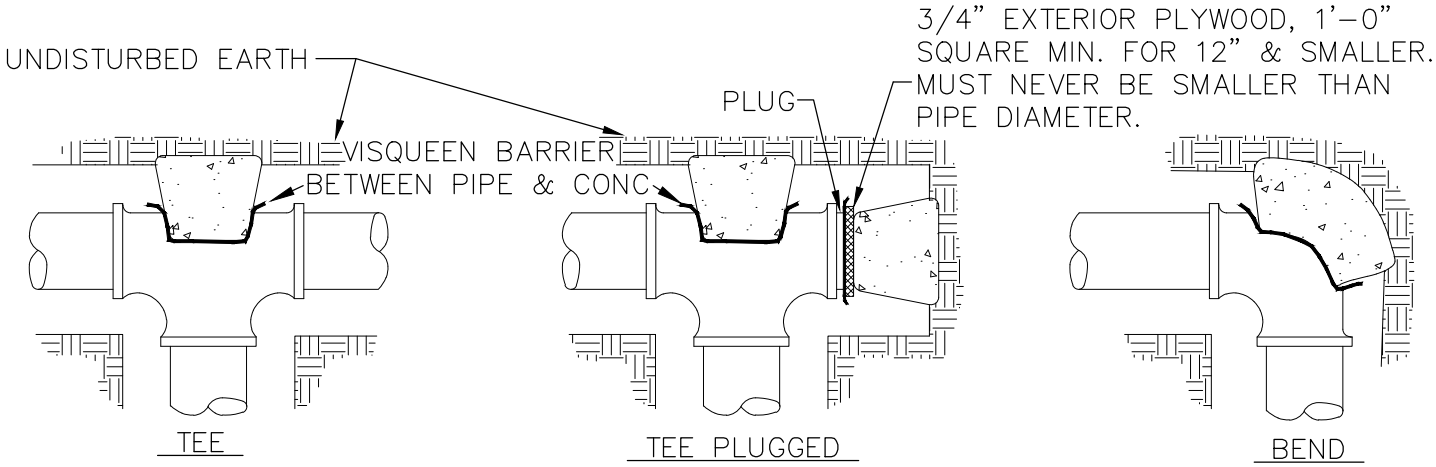

DIMENSIONS FOR THRUST BLOCKING								
FITTING	TEES & PLUGS		90° BENDS		45° BENDS & "Y"S		22 1/2° BENDS	
SIZES	A	B	A	B	A	B	A	B
4"	1'-6"	1'-6"	1'-6"	1'-9"	1'-3"	0'-6"	1'-0"	0'-6"
6"	2'-0"	1'-0"	2'-0"	2'-0"	1'-3"	1'-6"	1'-0"	1'-5"
8"	2'-0"	1'-6"	2'-3"	2'-3"	1'-8"	1'-8"	1'-0"	1'-3"
10"	2'-6"	2'-3"	2'-9"	2'-10"	2'-3"	1'-10"	1'-3"	2'-0"
12"	3'-0"	2'-9"	3'-6"	3'-3"	2'-6"	2'-4"	2'-0"	1'-6"
14"	3'-5"	3'-0"	4'-0"	3'-8"	3'-6"	2'-4"	2'-0"	2'-3"
16"	4'-0'	3'-6"	5'-0"	4'-0"	3'-6"	3'-0"	2'-6"	2'-3"
18"	4'-0"	4'-3"	6'-0"	4'-0"	4'-0"	3'-3"	2'-9"	2'-6"
20"	5'-0"	4'-3"	6'-0"	5'-0"	4'-3"	4'-0"	3'-0"	2'-9"
24"	6'-0"	5'-3"	8'-0"	5'-6"	6'-0"	4'-0"	4'-0"	3'-0"

NOTES:

1. THIS TABLE IS BASED ON 200 P.S.I. MAIN PRESSURE AND 2000 P.S.F. SOIL BEARING PRESSURE. ADJUST BEARING AREAS IN ACCORDANCE WITH SOIL CONDITIONS AND PRESSURES ENCOUNTERED.
2. FOR ASBESTOS CEMENT PIPE GREATER THAN 6 INCHES IN DIAMETER DOUBLE THE AREA REQUIRED IN THE TABLE ABOVE.
3. USE VISQUEEN BETWEEN CONCRETE AND PIPE.
4. REFER TO CONCRETE STANDARD SPECIFICATIONS.
5. THE "THRUST BLOCKING DETAILS" IN NO WAY LIMITS THE LOCATION OR SIZE OF ADDITIONAL BLOCKING WHEN SO WARRANTED OR REQUIRED BY THE ENGINEER.

THRUST BLOCK DETAIL

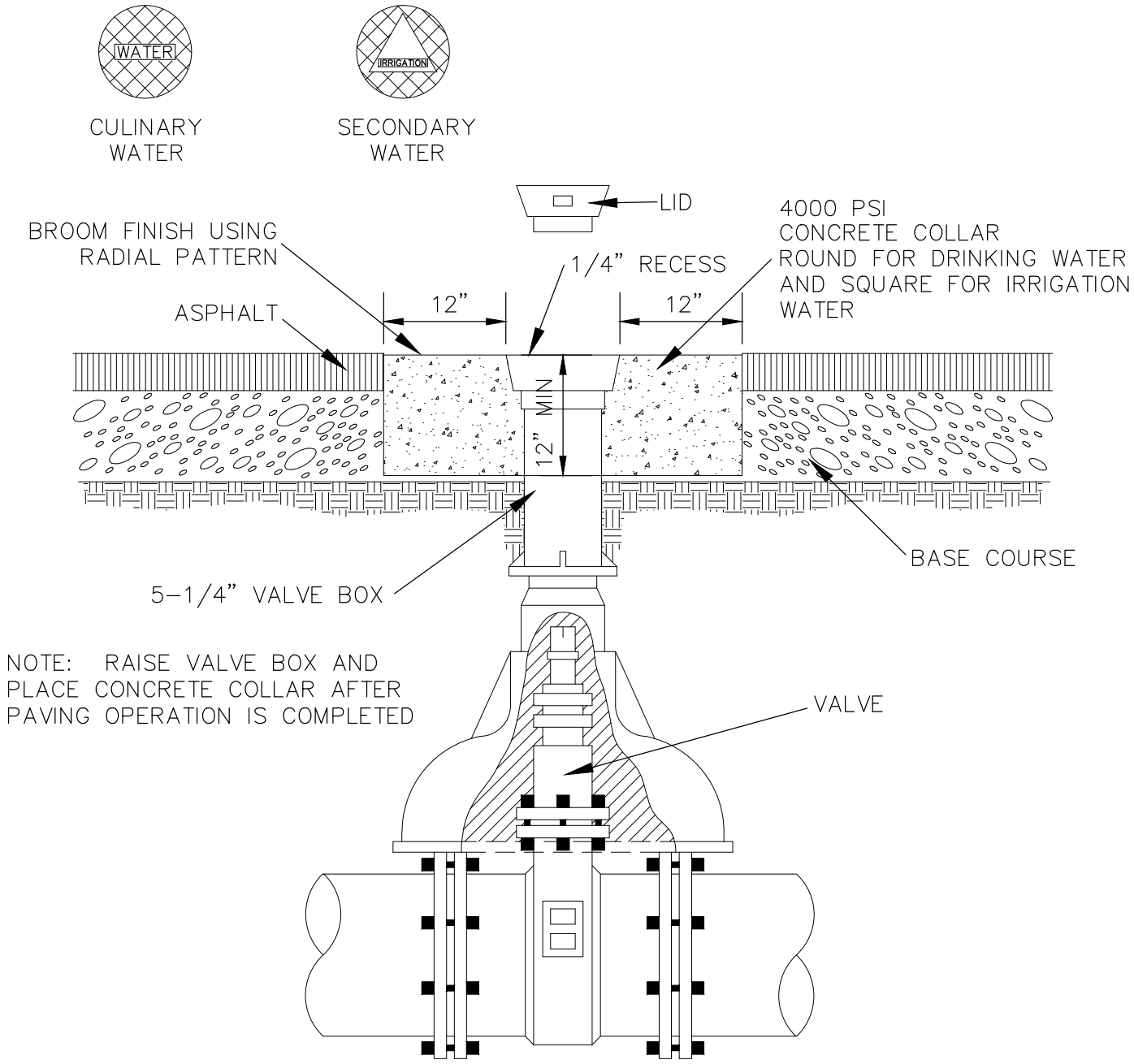

6-43

VALVE BOX COLLAR DETAIL

REV. 07-08

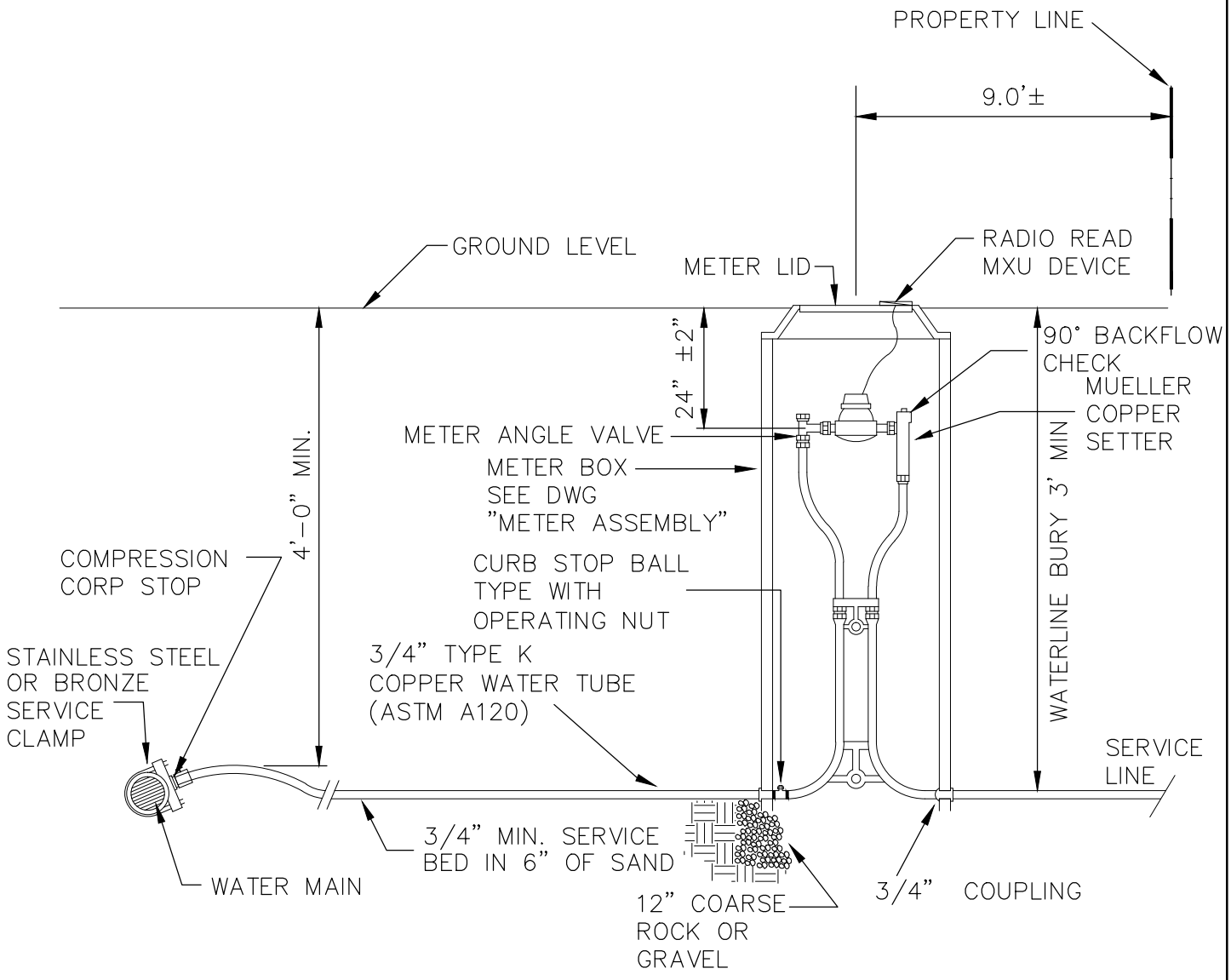

NOTES:

1. METER BOX SHALL BE SET PLUMB
2. THREADS ON TAP SHALL MATCH THREADS ON CORPORATION STOP.
3. REFER TO WRITTEN SPECIFICATIONS FOR ADDITIONAL DETAILS.
4. NO METERS ARE TO BE INSTALLED IN SIDEWALK OR DRIVEWAYS UNLESS FIRST APPROVED BY THE CITY.
5. FOR DETAILED INFORMATION SEE SPECIFICATIONS.
6. METER BOX DIAMETERS (MINIMUMS):
   18" ø FOR 3/4" SERVICE
   24" ø FOR 1" SERVICE
   48" ø FOR 1-1/2" OR 2" SERVICE (CONCRETE PIPE SECTION OR MANHOLE)

6-44

SERVICE CONNECTION & METER ASSEMBLY

REV. 04-07

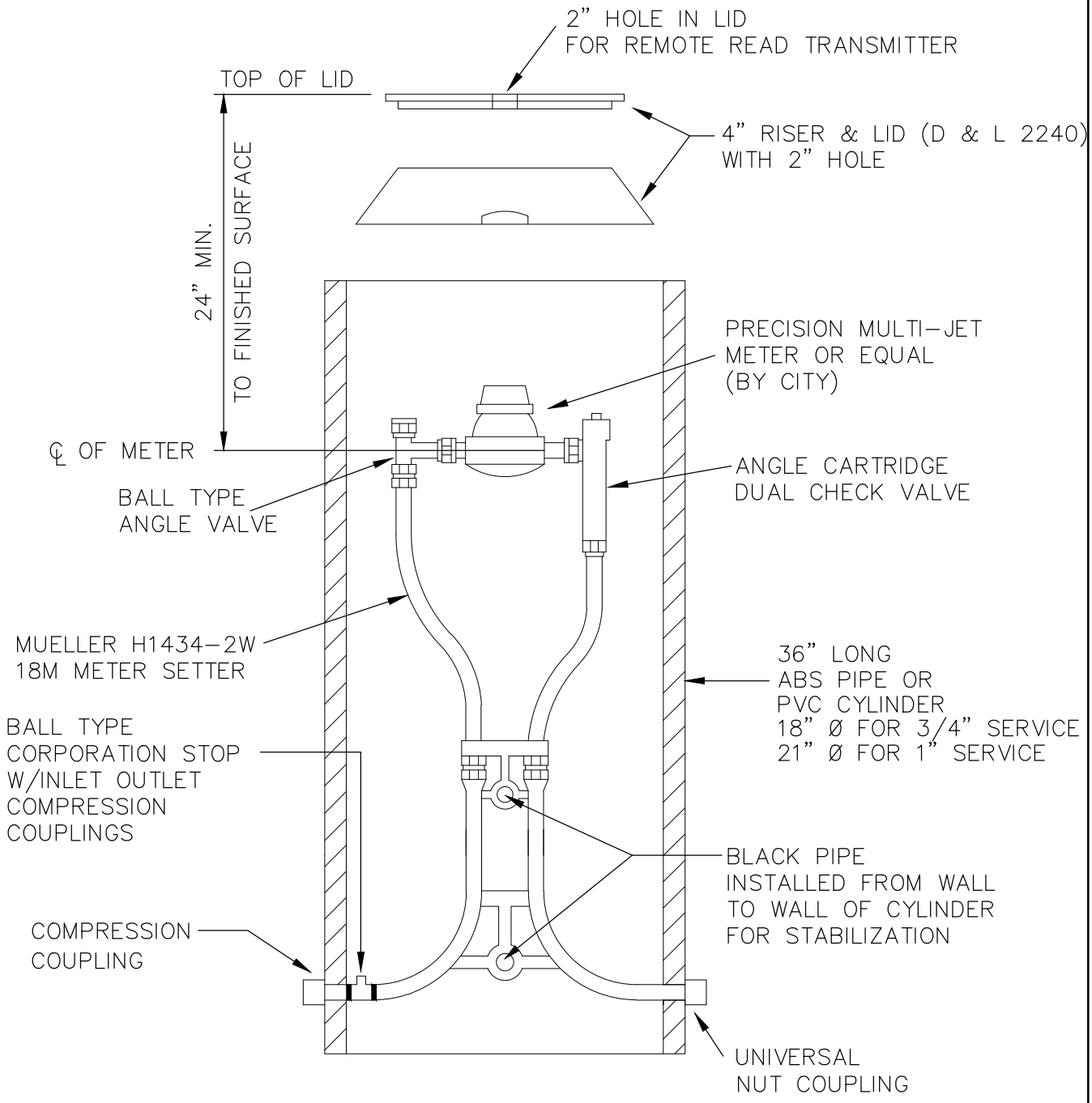

NOTE

ALL COMPONENTS EXCEPT METER PROVIDED BY CONTRACTOR. METER PROVIDED BY PUBLIC WORKS DEPT.

6-45

3/4" – 1" METER ASSEMBLY

REV. 04-07

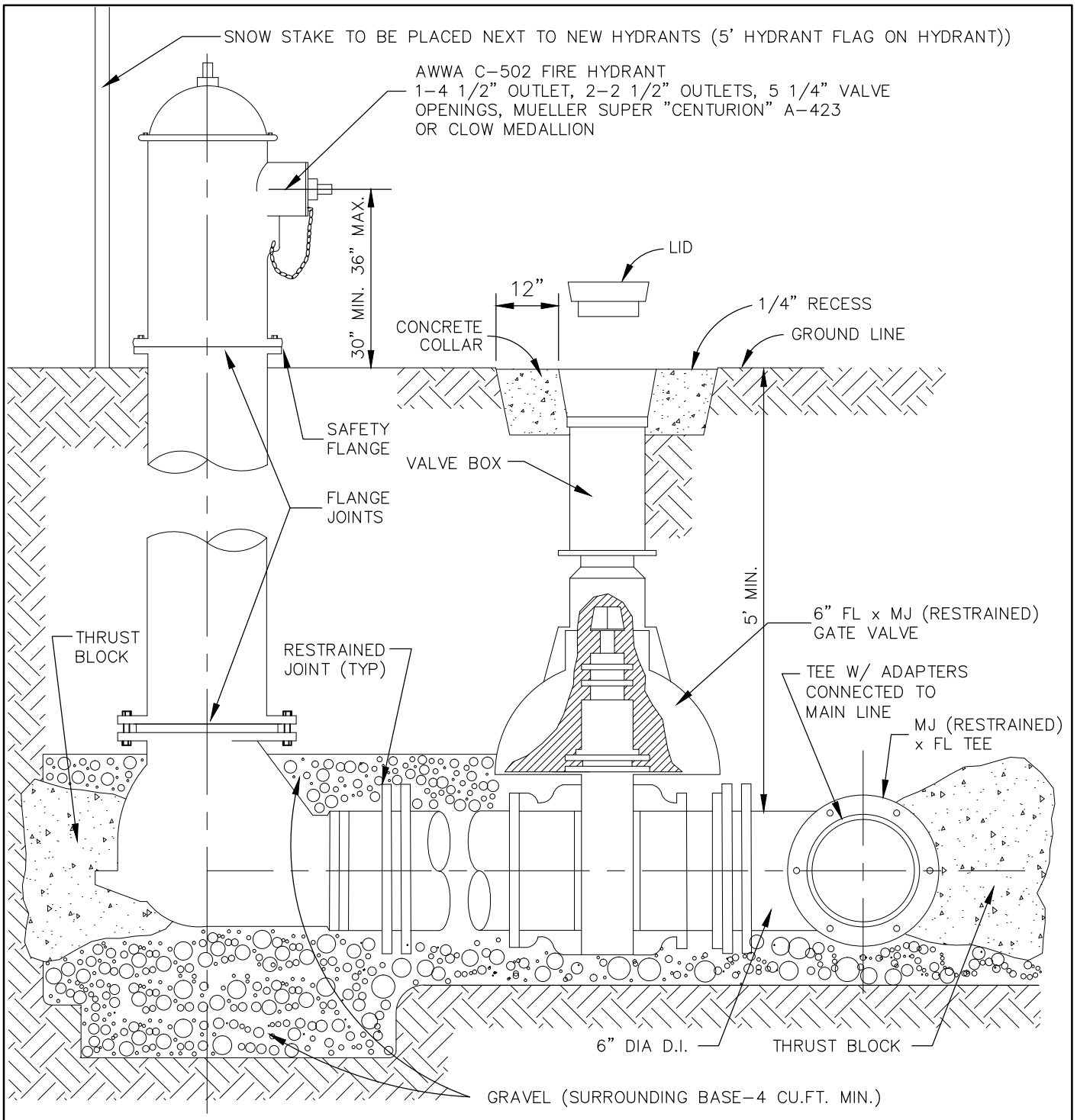

NOTES:

1. ALL FIRE HYDRANTS SHALL BE LOCATED AS SHOWN ON THE PLANS.
2. ALL FIRE HYDRANTS WILL STAND PLUMB WITH THE PUMPER NOZZLE FACING THE STREET.
3. THE VALVE WILL BE LOCATED AS APPROVED BY CITY. PIPE MATERIAL SHALL BE DUCTILE.
4. FOR DETAILED INFORMATION SEE SPECIFICATIONS.
5. RESTRAIN ALL JOINTS FROM MAIN TO FIRE HYDRANT.
6. CONCRETE VALVE COLLAR SHALL BE BROOM FINISHED IN RADIAL PATTERN.

6-46

FIRE HYDRANT ASSEMBLY

REV. 07-08

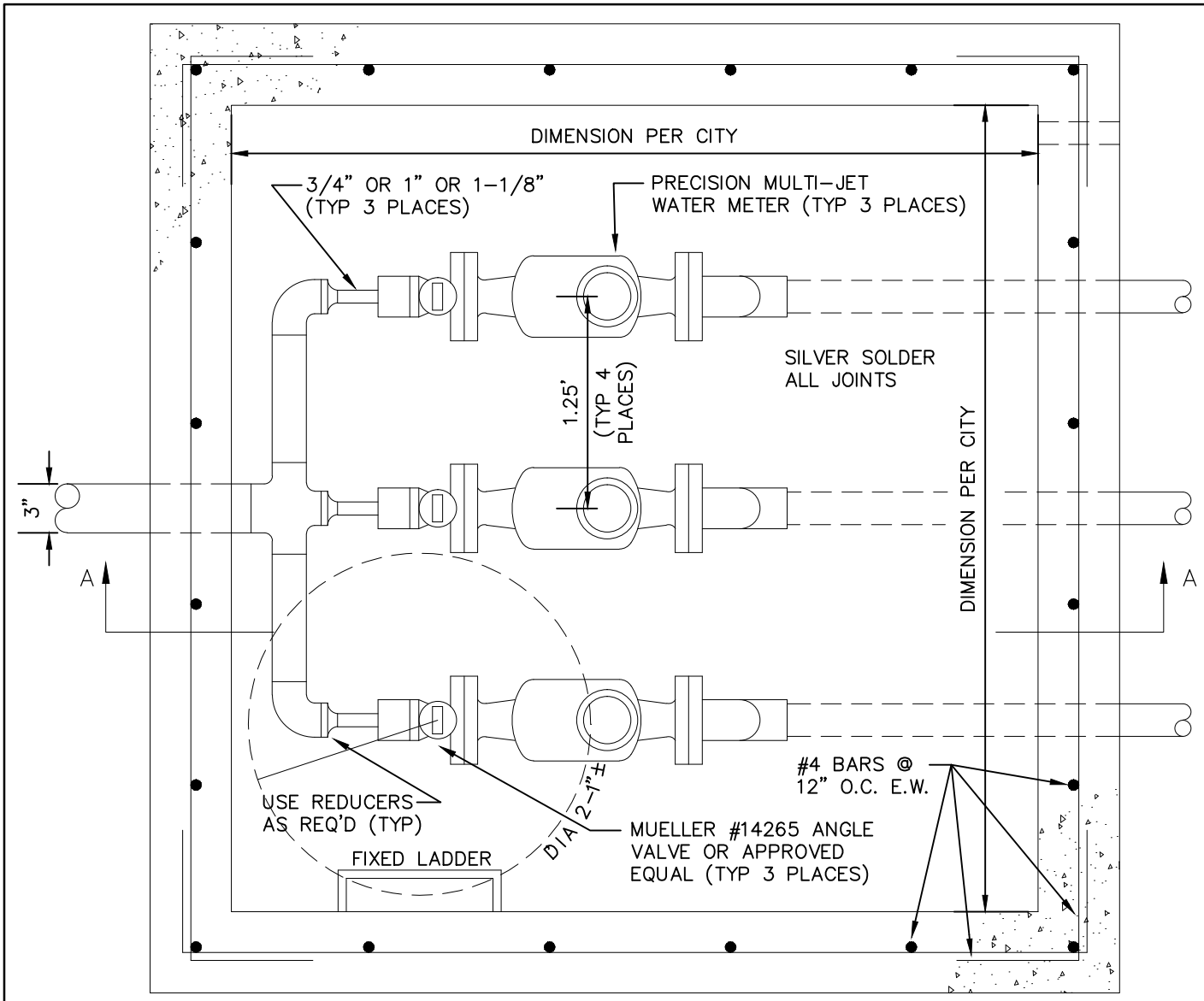

PLAN

NOTE: FOR 2 METERS BOX SIZE SHALL BE 4'x4'

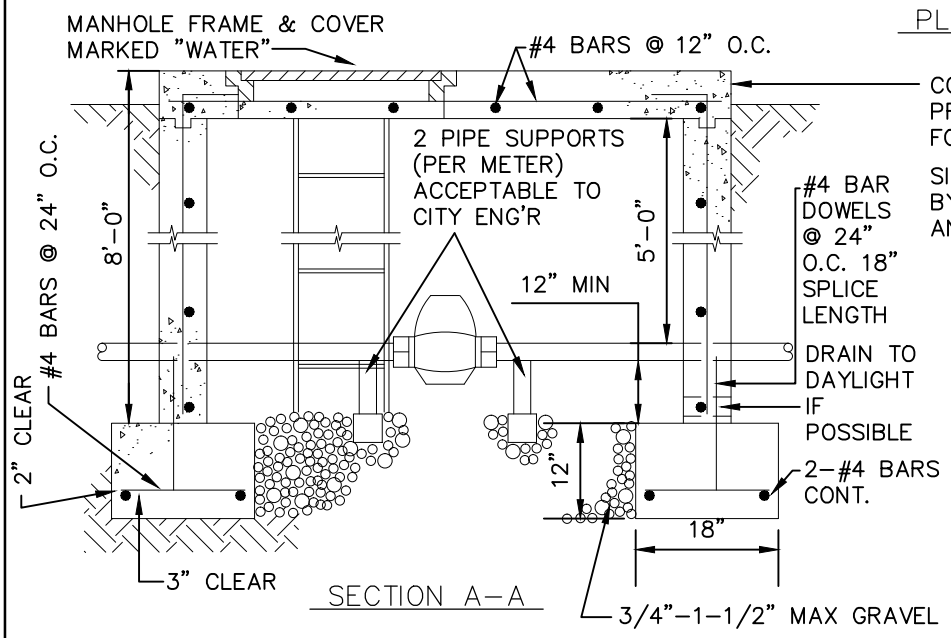

SECTION A-A

CONCRETE VAULT
PRECAST VAULTS MAY BE SUBMITTED FOR ALTERNATE VAULT APPROVAL

SIZING OF VAULT TO BE DETERMINED BY CITY BASED ON NUMBER OF METERS AND ACCESS REQUIREMENTS.

NOTES

1. USE COPPER PIPE ONLY
2. AT EXPENSE OF DEVELOPER/OWNER, REMOTE READOUT W/APPURTENANT WIRING MAY BE REQUIRED BY CITY ENGINEER OR WATER SUPERINTENDENT.
3. FIXED ALUMINUM OR STAINLESS STEEL LADDER REQ'D IN ALL VALUTS.
4. RADIO READ MXU TRANSMITTER REQ'D. FOR EACH METER.

6-47

METER VAULT FOR MULTIPLE METERS FOR 3/4" TO 1-1/2" METERS

REV. 1-06

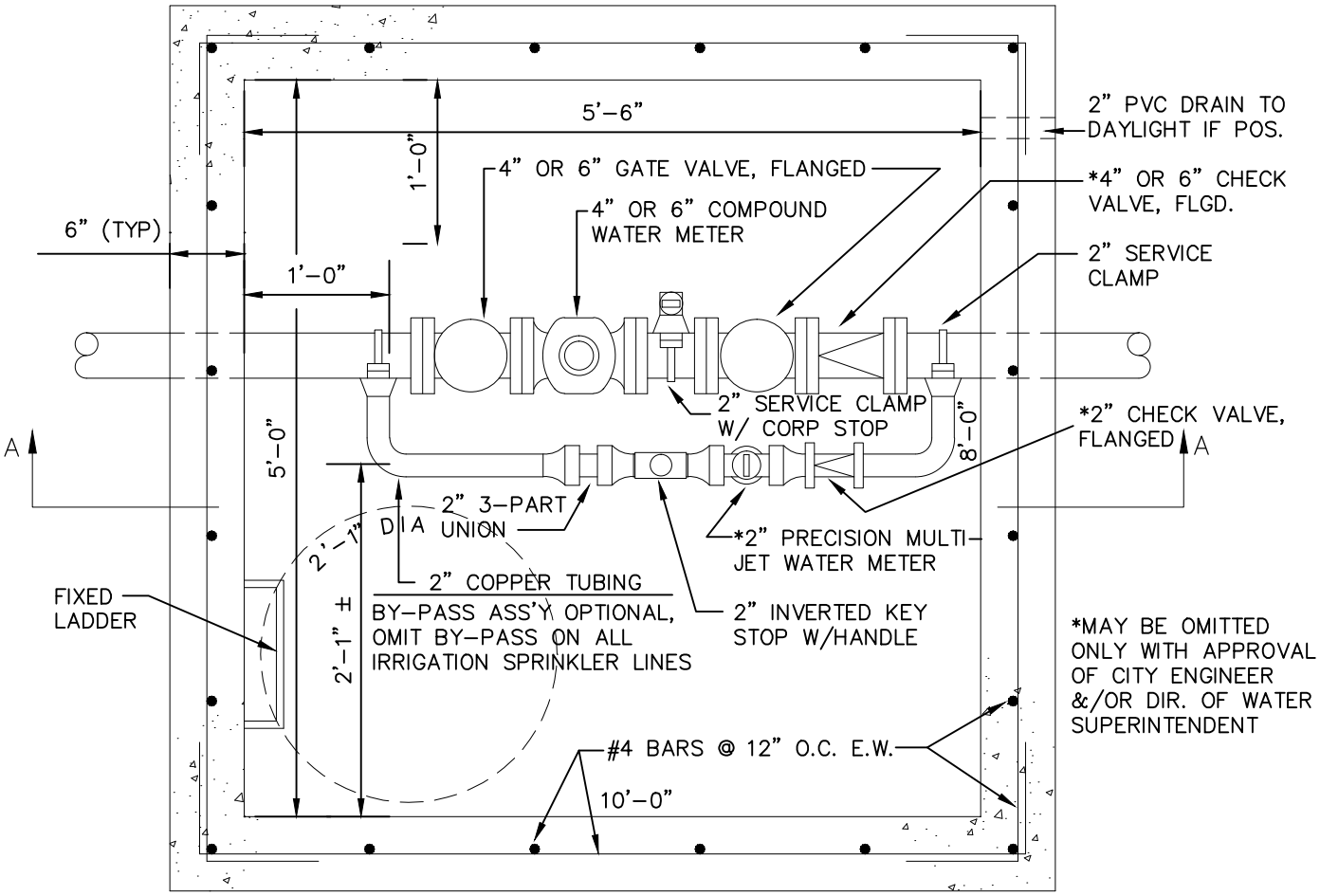

PLAN

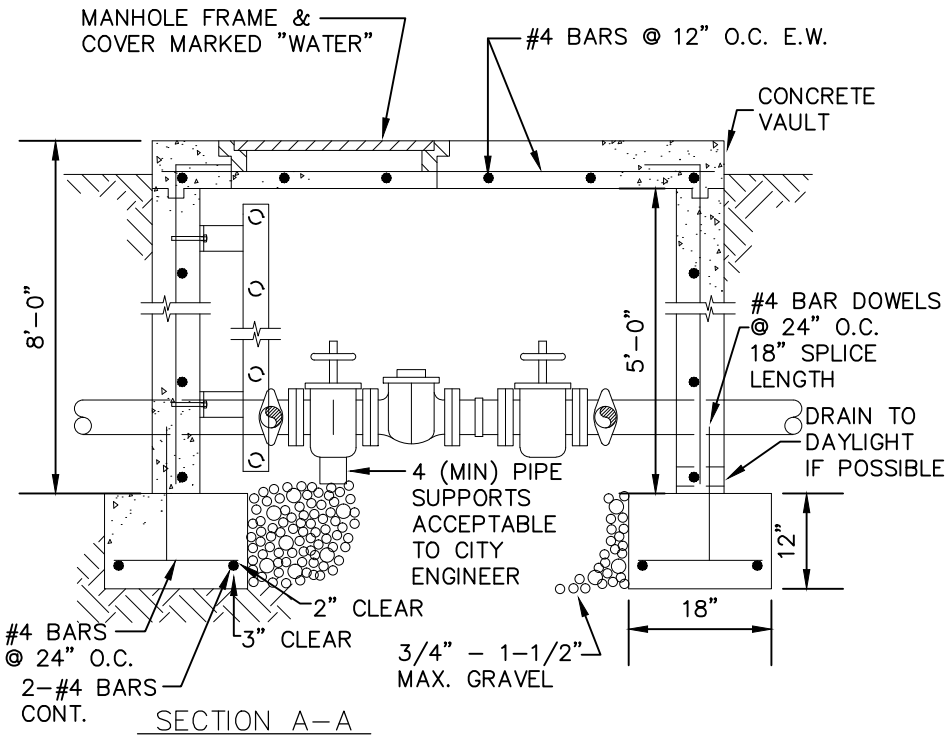

SECTION A-A

NOTES: FIRE LINES SHALL ALSO BE METERED UNLESS OTHERWISE APPROVED BY WATER SUPERINTENDENT. METER PROVIDED BY CITY. VAULT BY DEVELOPER. IF MULTIPLE METERS ARE USED IN ONE VAULT, THE CONTRACTOR SHALL BE RESPONSIBLE FOR DETERMINING VAULT SIZE NECESSARY TO CONTAIN ALL COMPONENTS.

EIGHT-INCH OR LARGER METERS SHALL BE INSTALLED IN AN APPROPRIATELY SIZED VAULT SUBJECT TO APPROVAL OF CITY ENGINEER. AT THE EXPENSE OF DEVELOPER/OWNER, REMOTE READOUT WITH APPURTENANT WIRING MAY BE REQUIRED BY CITY ENGINEER OR PUBLIC WORKS DIRECTOR.

FIXED ALUMINUM OR STAINLESS STEEL LADDER REQ'D. IN ALL VAULTS.

TOP OF VAULT NEEDS TO BE WITHIN 1'-0" OF FINISH GRADE.

6-48

METER VAULT & BYPASS DETAIL FOR 4" AND 6" METERS ONLY

REV. 1-06

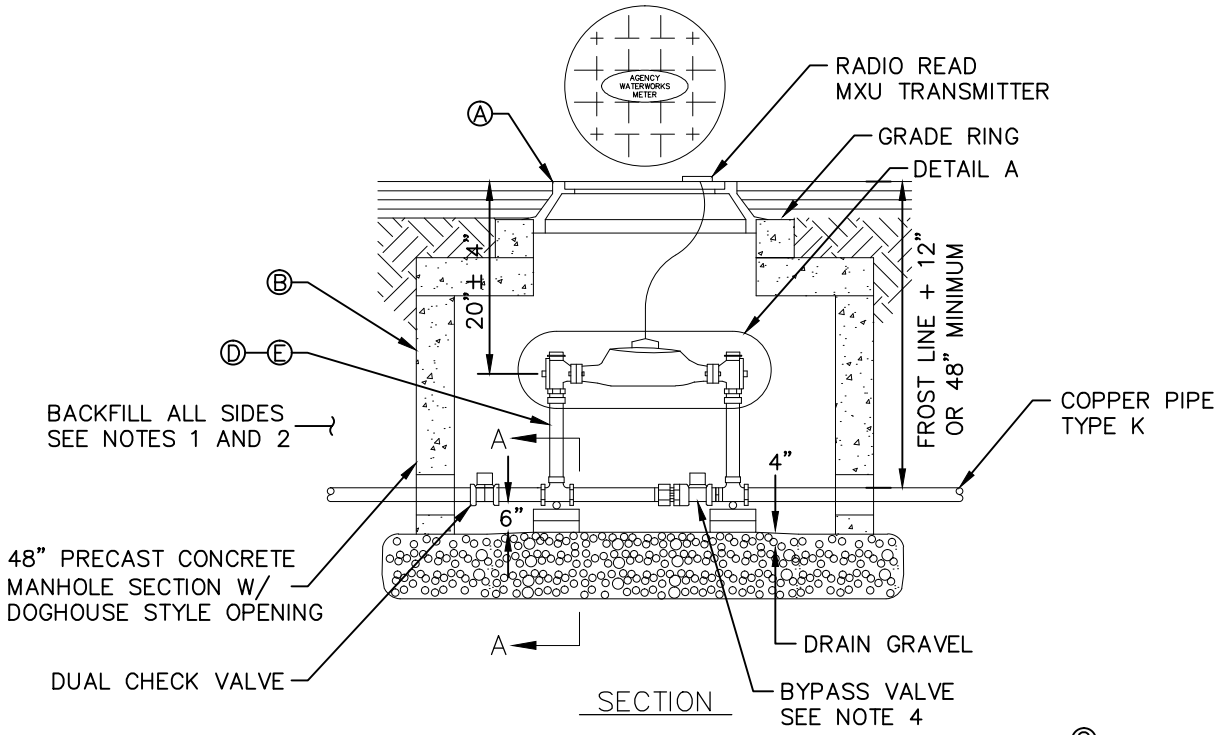

SECTION

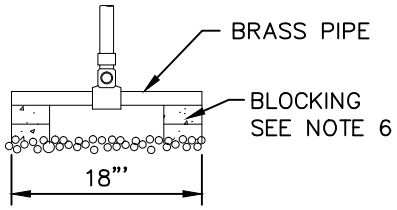

SECTION A–A

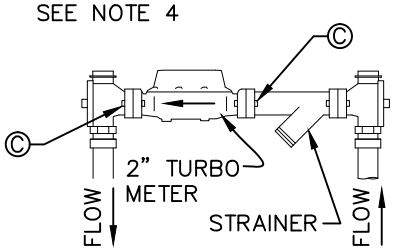

DETAIL A

TURBO METER INSTALLATION SEE NOTE 3

LEGEND			
NO.	*	ITEM	DESCRIPTION
Ⓐ		27" FRAME AND COVER	SEE PLAN NO. 502
Ⓑ		CONCRETE BOX	SEE PLAN NO. 505
Ⓒ		METER BOLTS	5/8" x 2 3/4" BRASS
Ⓓ		1 1/2" CUSTOM SETTER WITH BYPASS	
Ⓔ		2" CUSTOM SETTER WITH BYPASS	

* FURNISHED BY UTILITY AGENCY

NOTES

1. INSPECTION: PRIOR TO BACKFILLING AROUND THE METER BOX, SECURE INSPECTION OF INSTALLATION BY ENGINEER.
2. BACKFILL: INSTALL AND COMPACT ALL BACKFILL MATERIAL PER STANDARDS.
3. BYPASS VALVE: LOCK IN OFF POSITION.
4. CONCRETE BOX: ALLOW 1 INCH CLEARANCE AROUND WATERLINE WHERE LINE PASSES THROUGH WALL. SEAL OPENING WITH COMPRESSIBLE SEAL. CENTER FRAME AND COVER OF WATER METER.
5. BLOCKING: USE CLAY BRICK OR CONCRETE BLOCK.
6. METER: PROVIDE WATER METER UNLESS PROVIDED BY UTILITY AGENCY.
7. PIPE: INSTALL TYPE 'K' COPPER PIPE TO PROPERTY LINE. COORDINATE WITH UTILITY AGENCY FOR TYPE OF PIPE TO BE USED OUTSIDE OF RIGHT–OF–WAY.
8. PLACEMENT:
   A. DO NOT INSTALL METERS UNDER DRIVEWAY APPROACHES, SIDEWALKS, OR CURB AND GUTTER.
   B. IN NEW CONSTRUCTION, INSTALL METER AT CENTER OF LOT OR AS DIRECTED BY ENGINEER.
   C. ALL METERS ARE TO BE INSTALLED IN THE PARK STRIP OR WITHIN 5 FEET OF THE PROPERTY LINE (STREET SIDE).

METER PIT & BYPASS DETAIL FOR 1 1/2" AND 2" METERS ONLY

REV. 04–07

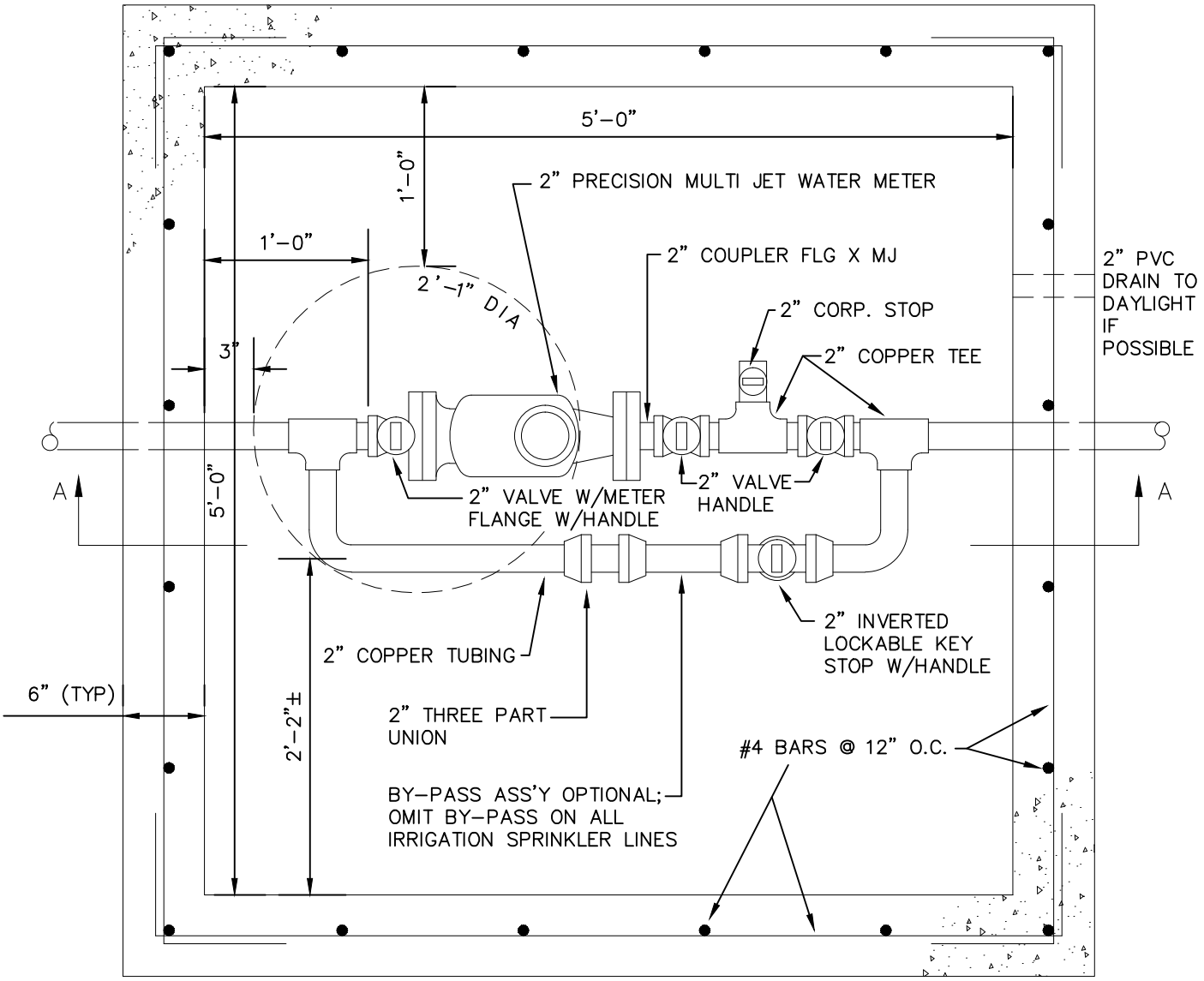

PLAN

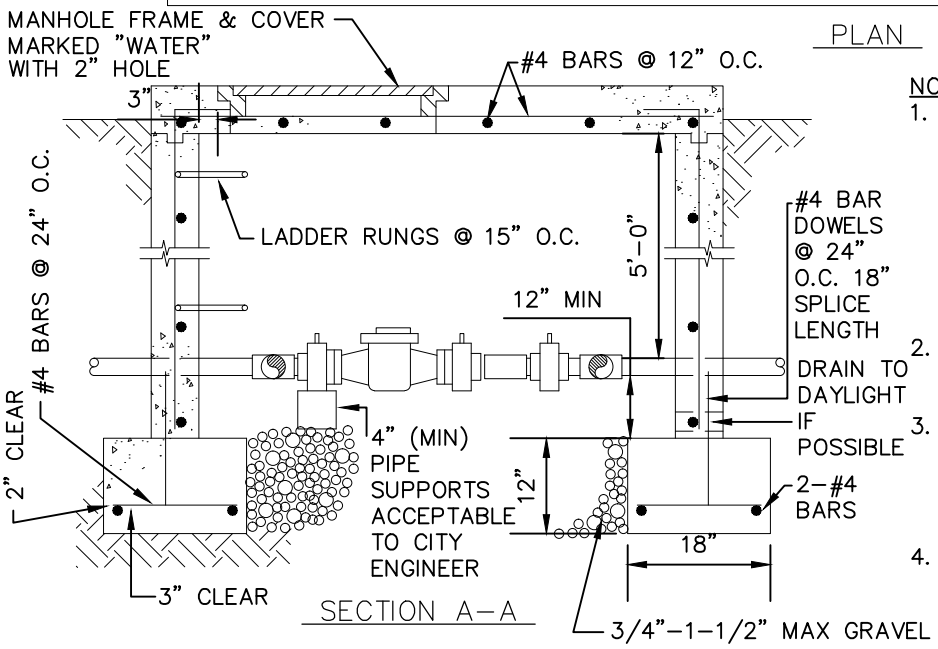

SECTION A–A

NOTES

1. FIRE LINES SHALL ALSO BE METERED UNLESS OTHERWISE APPROVED BY WATER SUPERINTENDENT. METER PROVIDED BY CITY. VAULT BY DEVELOPER.
   IF MULTIPLE METERS ARE USED IN ONE VAULT, THE WATER SUPERINTENDENT SHALL BE RESPONSIBLE FOR DETERMINING VAULT SIZE NECESSARY TO CONTAIN ALL COMPONENTS.
2. PRECAST VAULTS ACCEPTABLE SUBJECT TO APPROVAL OF CITY ENGINEER.
3. AT THE EXPENSE OF DEVELOPER/ OWNER, REMOTE READOUT WITH APPURTENANT WIRING MAY BE REQUIRED BY CITY ENGINEER OR WATER SUPERINTENDENT.
4. NO SWEAT–FITTINGS. SILVER SOLDERED FITTINGS WITH PRIOR APPROVAL OF CITY ENGINEER.

6–49

METER VAULT & BYPASS DETAIL FOR 2" METERS ONLY

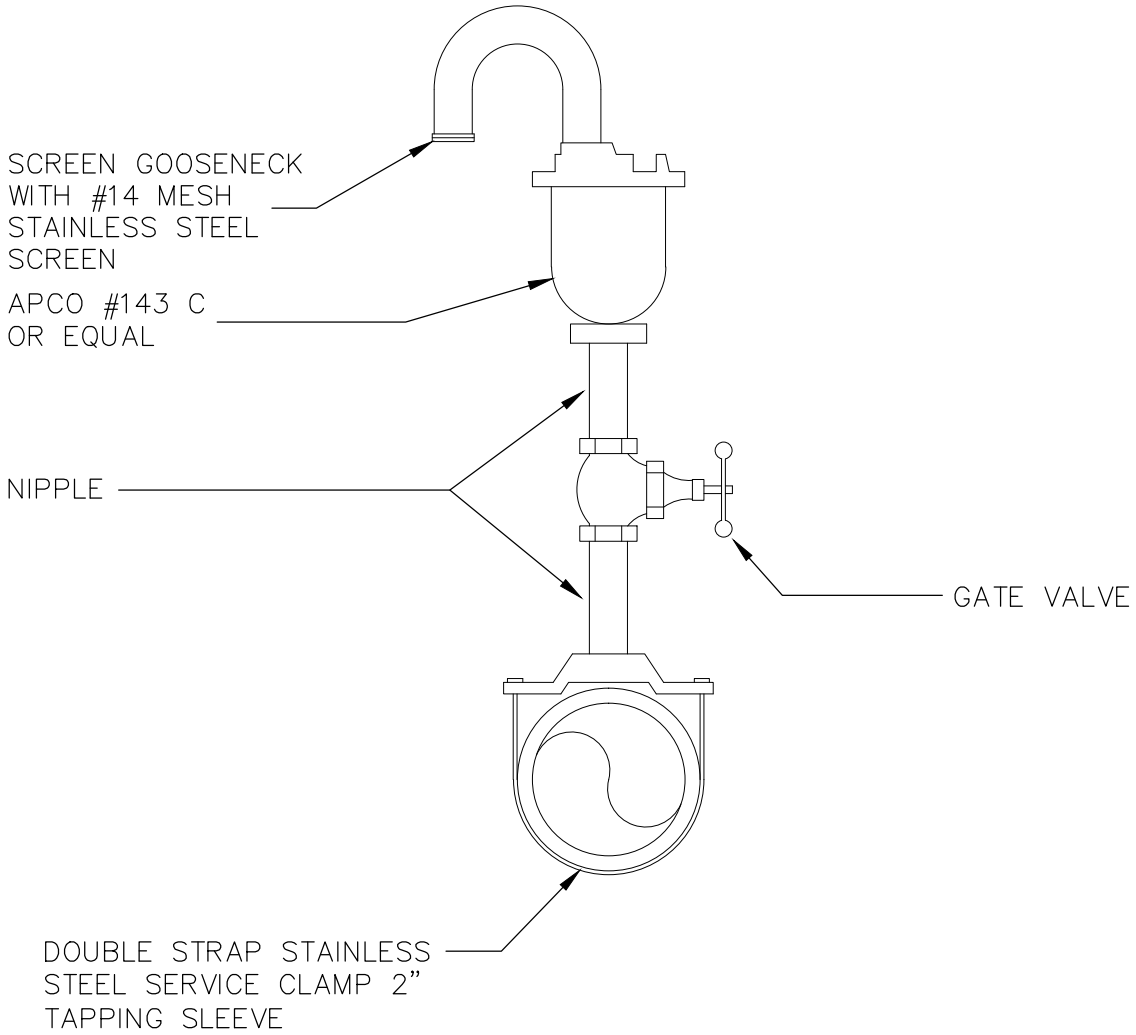

6–50

COMBINATION AIR RELEASE VALVE

REV. 1–06

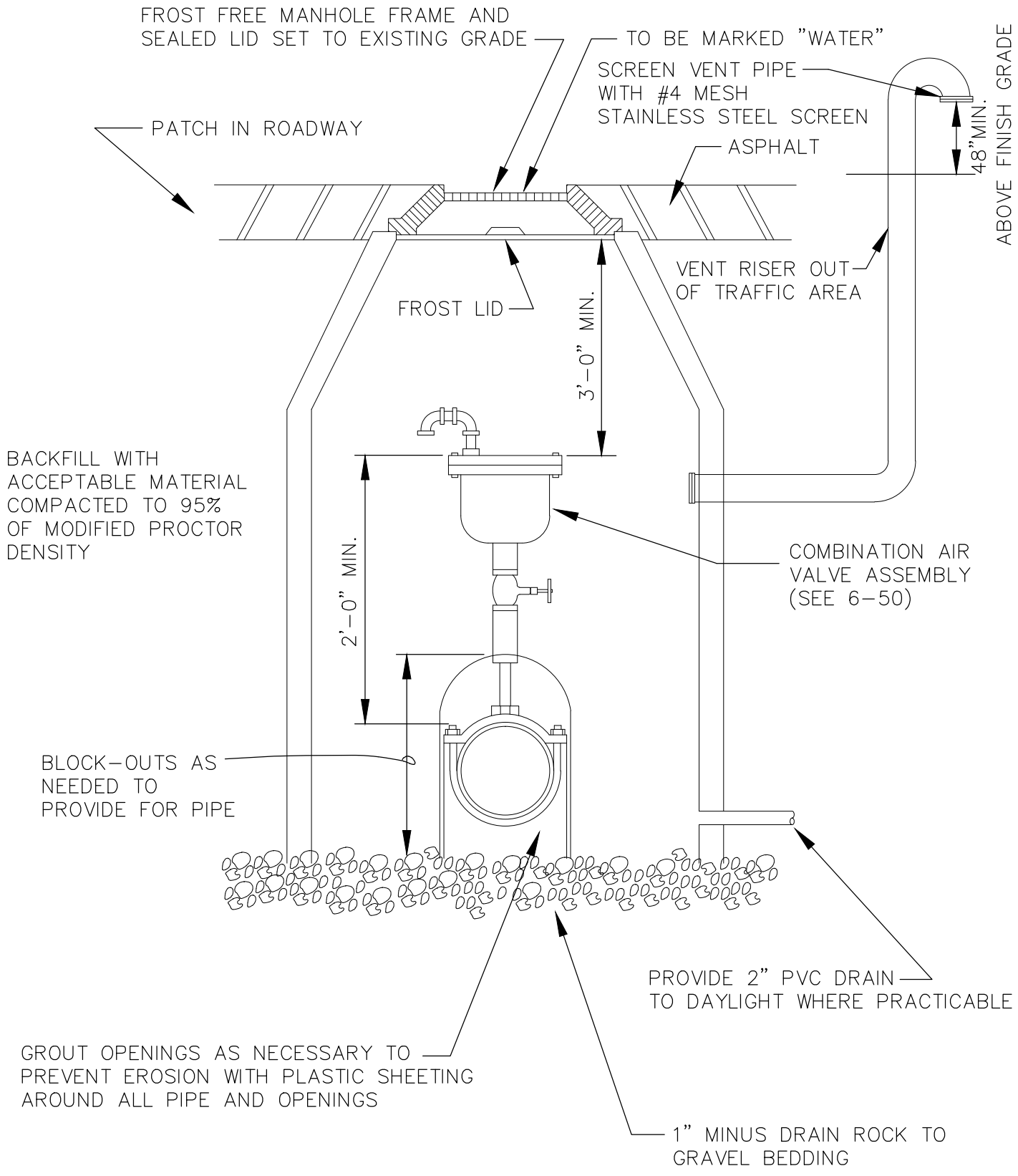

6-51

AIR RELEASE VALVE MANHOLE DETAIL

REV. 1-06

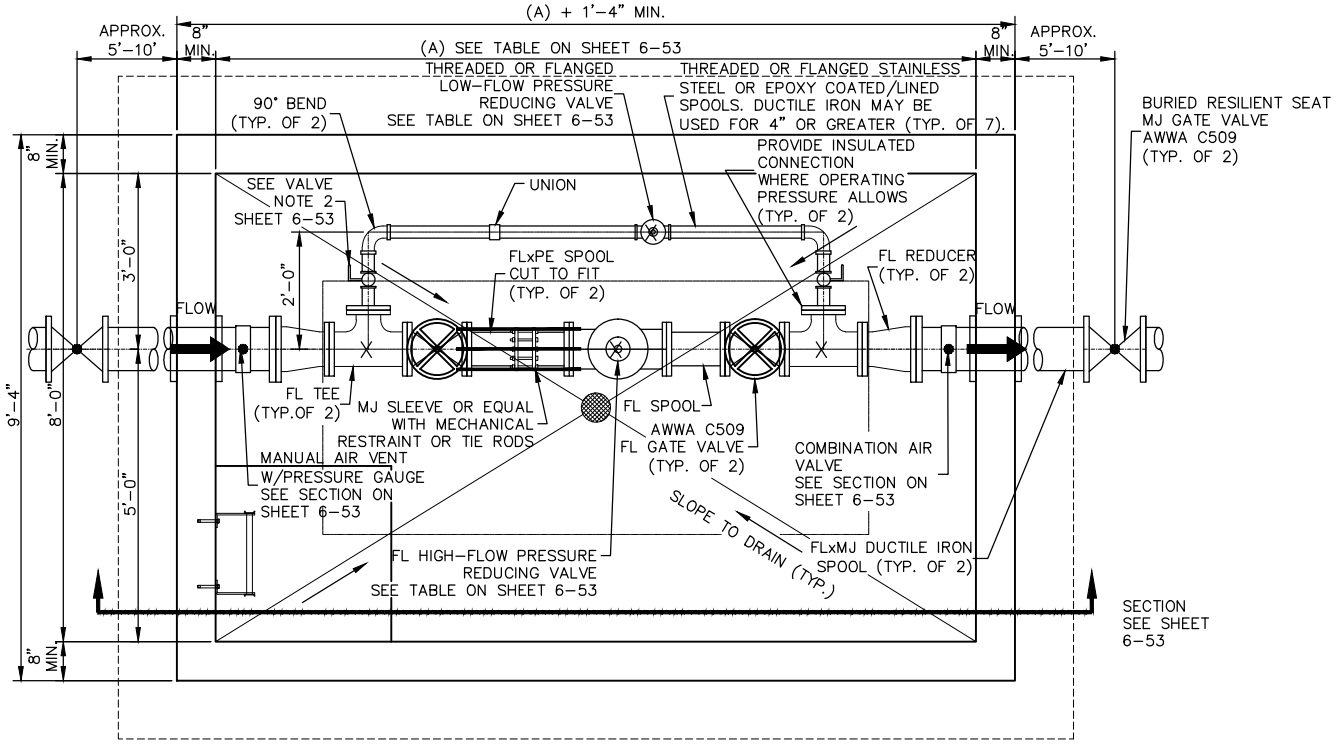

PLAN

PRV SPECIFICATIONS:

1– ALL PRV SHALL BE EQUIPPED WITH STAINLESS STEEL POSITION INDICATORS AND "NO YELLOW METAL OPTION".
2– SPECIFY LONGITUDINAL RESTRAINT REQUIREMENTS FOR THE OPERATING CONDITIONS AND RESTRAIN ALL JOINTS AS REQUIRED.
3– LABEL PROPOSED PRV SETTINGS ON PLANS.

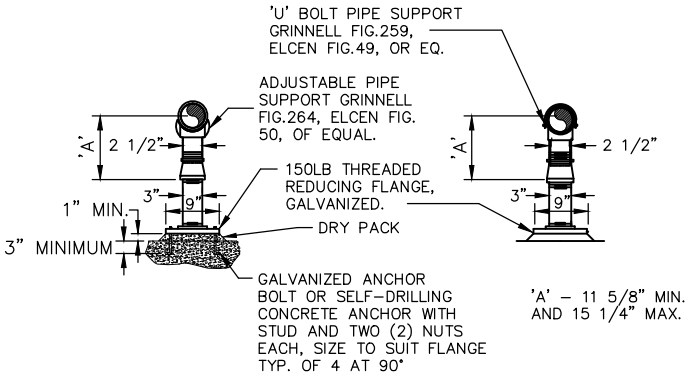

ADJUSTABLE PIPE SUPPORT DETAIL
SCALE: NONE

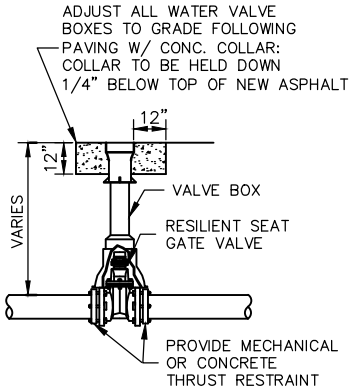

TYPICAL BURIED RESILIENT SEAT GATE VALVE W/VALVE BOX

PRESSURE REDUCING VALVE VAULT

REV. 1–06

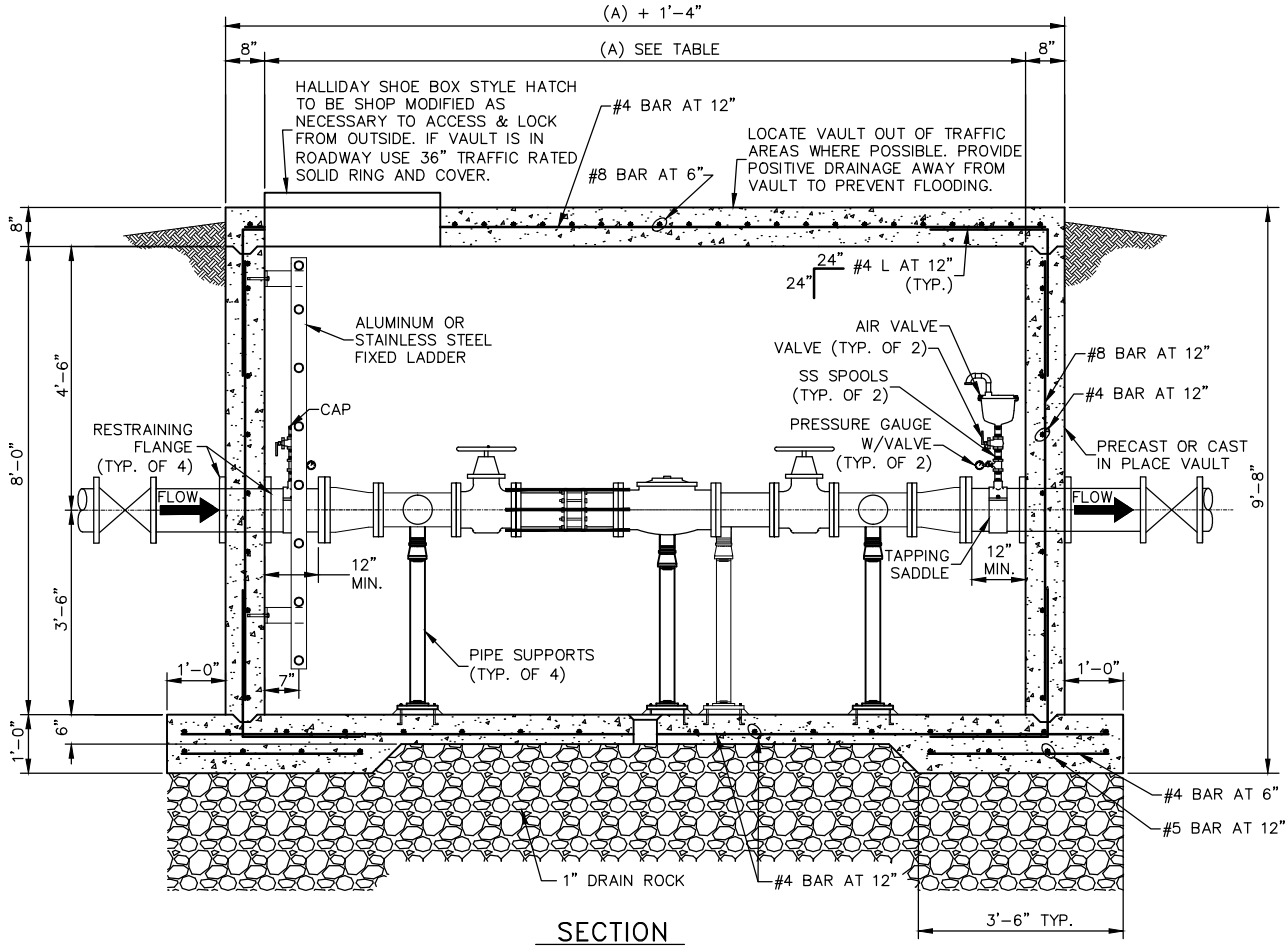

SECTION

NOTES:

1. ALL BOLTS IN VAULT ARE TO BE STAINLESS STEEL OR TRIPAC.
2. THE LOW FLOW LINE VALVES MAY BE BALL VALVES TO 3" AND GATE VALVES FOR 4" OR GREATER.
3. PRECAST VAULTS MAY BE USED. VAULT REINFORCING IS FOR TRAFFIC LOADING. REINFORCEMENT AND VAULT DESIGN MAY BE ALTERED BY DESIGN ENGINEER FOR NON-TRAFFIC LOADING CONDITIONS.
4. PROVIDE INSULATING CONNECTORS BETWEEN DISSIMILAR METALS WHERE OPERATING PRESSURES ALLOW.
5. USE TAPPING SADDLES FOR ALL TAPS. NO DIRECT TAPS ALLOWED.
6. USE STAINLESS STEEL OR EPOXY COATED/LINED FOR LOW-FLOW PIPING. DUCTILE IRON MAY BE USED FOR 4" OR GREATER.
7. ALL MAINLINE PIPING BETWEEN EXTERIOR GATE VALVES TO BE DUCTILE IRON WITH RESTRAINED JOINTS.

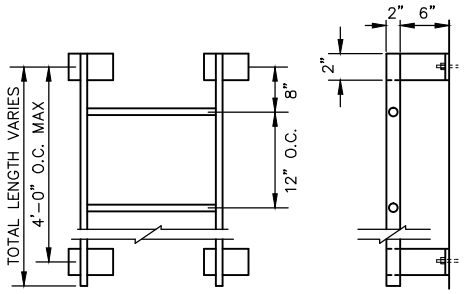

1. LADDER SHALL BE SHOP FABRICATED TO PROPER LENGTH & INSTALLED IN ONE PIECE.
2. SIDE RAILS AND MOUNTING BRACKETS TO BE 1/4"x2" GALVANIZED STEEL PLATE.
3. RUNGS TO BE 3/4"ø STEEL ROD.
4. ALL WELDS AND SPLICES SHALL BE BRUSHED WITH GALVANIZING AGENT IN SHOP.
5. USE 5/8"x4" BOLT CONNECTIONS.

LADDER DETAILS

PRESSURE REDUCTION VAULT TABLE

MAIN SIZE	PRV HIGH FLOW SIZE	PRV LOW FLOW SIZE	MANUAL AIR VENT	VAULT LENGTH (A)
8"	6"	3"	1"	14'-0"
10"	8"	4"	1 1/2"	14'-0"
12"	10"	6"	2"	16'-0"
14"	12"	8"	3"	16'-0"

PRESSURE REDUCING VALVE VAULT

REV. 1-06

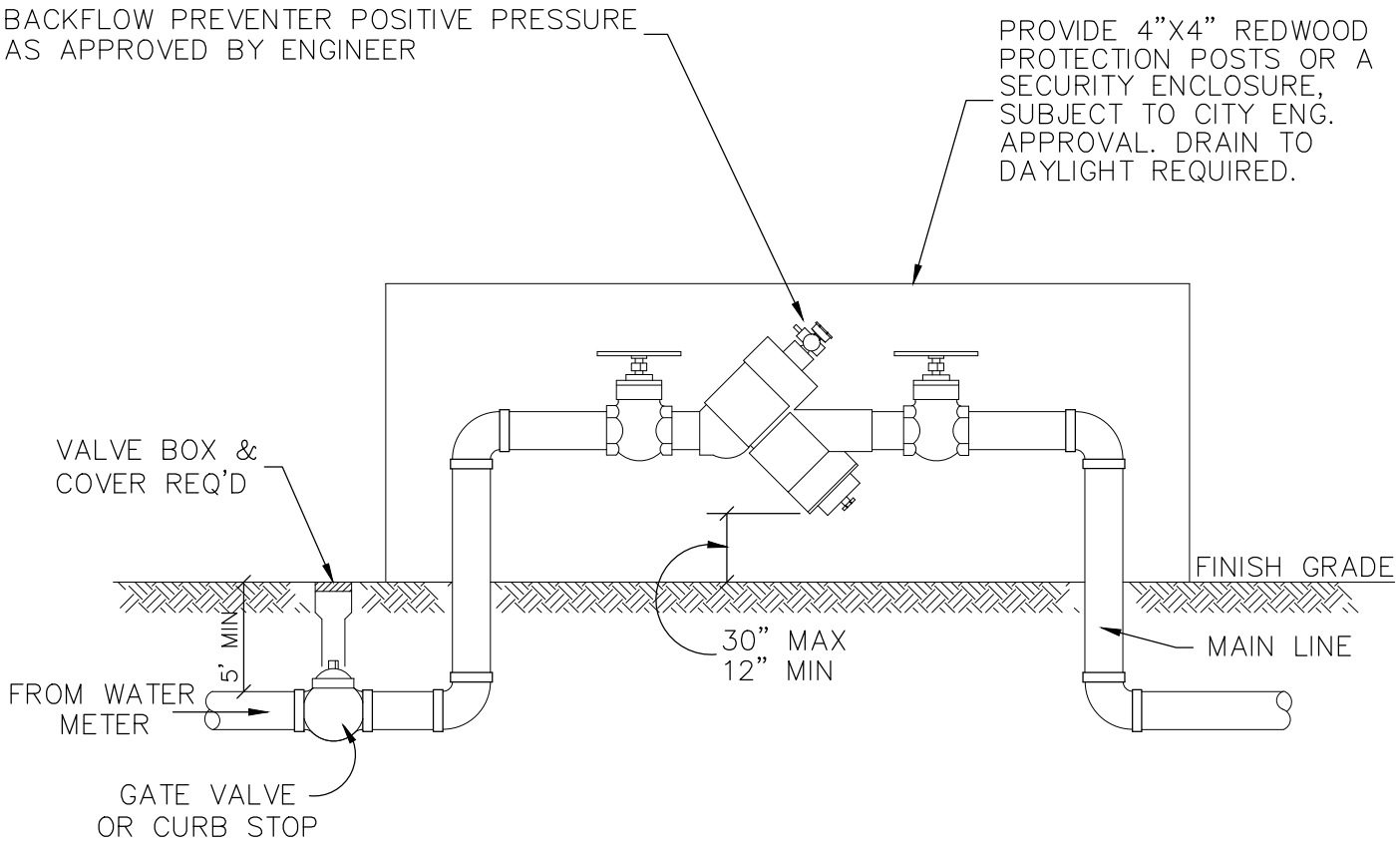

6-54

TYPICAL BACKFLOW PREVENTER INSTALLATION

REV. 04-07

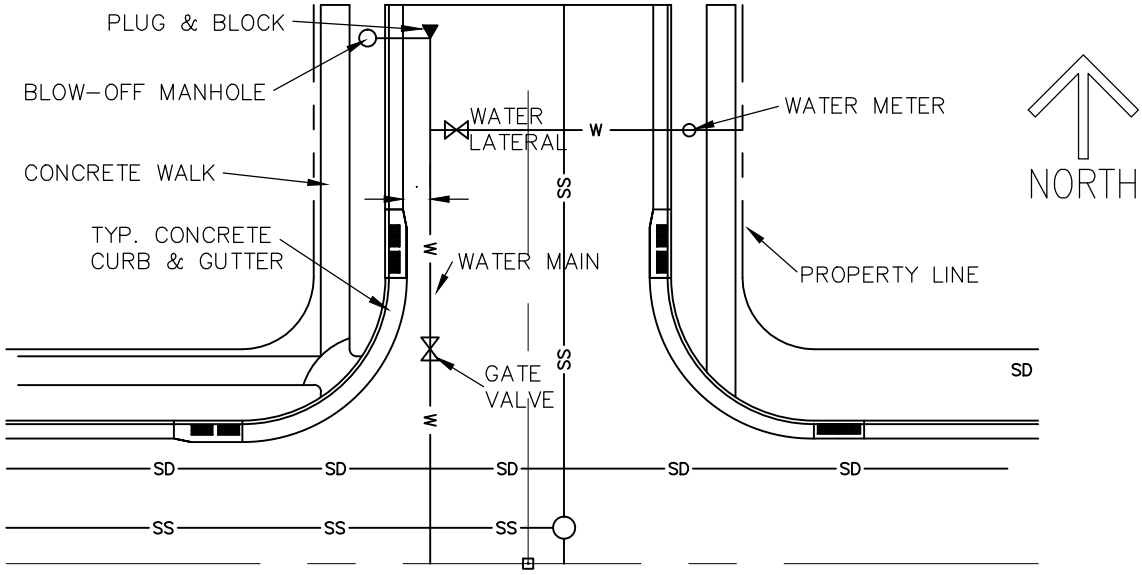

KUPFERLE
MAINGUARD NO. 78 BLOW-OFF HYDRANT

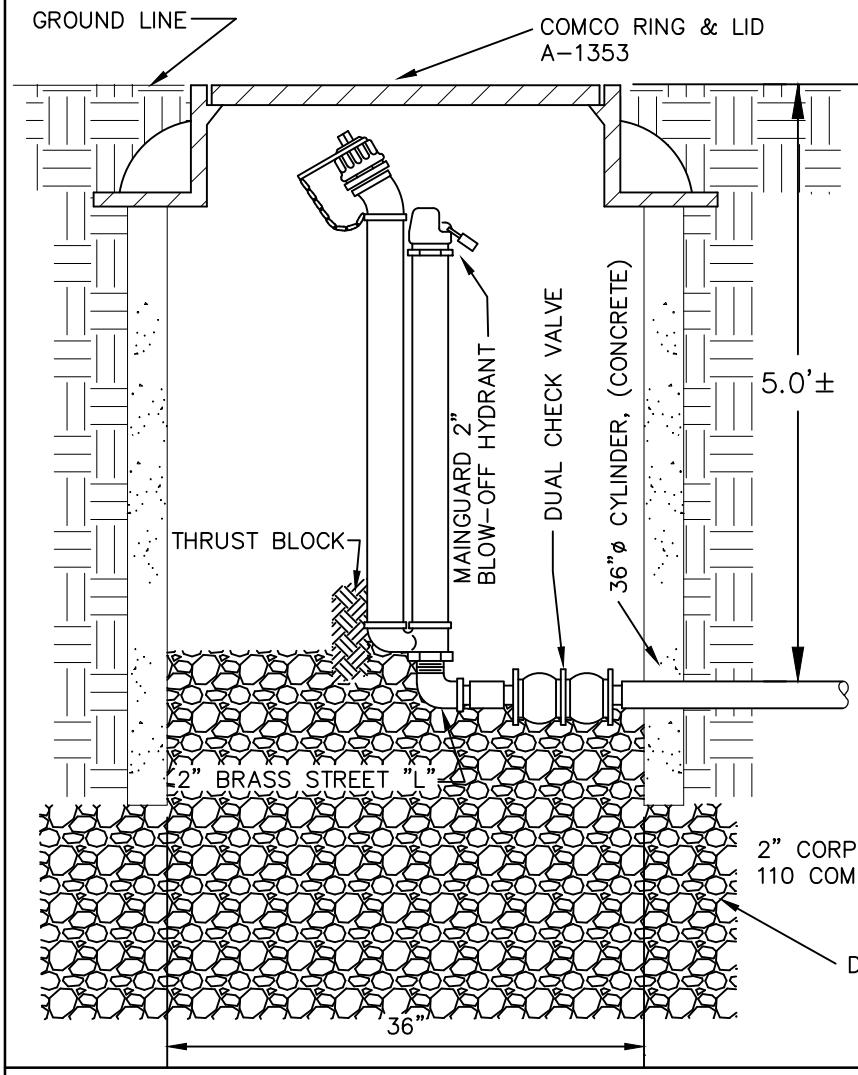

Blow-Off Hydrants shall be non-freezing, self draining type, with an overall length of 6" shorter than normal depth of bury. Set underground in a 36" cylinder, these hydrants will be furnished with a 2" FIP inlet, a non-turning operating rod, and shall open to the left. All of the working parts shall be of bronze-to-bronze design, and be servicable from above grade with no digging. The outlet shall also be bronze and be 2-1/2" NST. Hydrants shall be lockable to prevent unauthorized use as manufactured by Kupferle Foundry Co., St. Louis, MO, or approved equal.

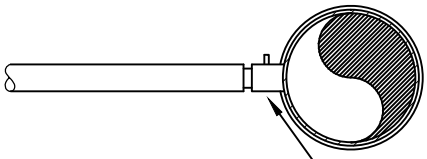

2" CORPORATION VALVE WITH MUELLER 110 COMPRESSION CONNECTION

DRAIN ROCK

6-55

2" BLOW-OFF INSTALLATION

REV. JAN 03

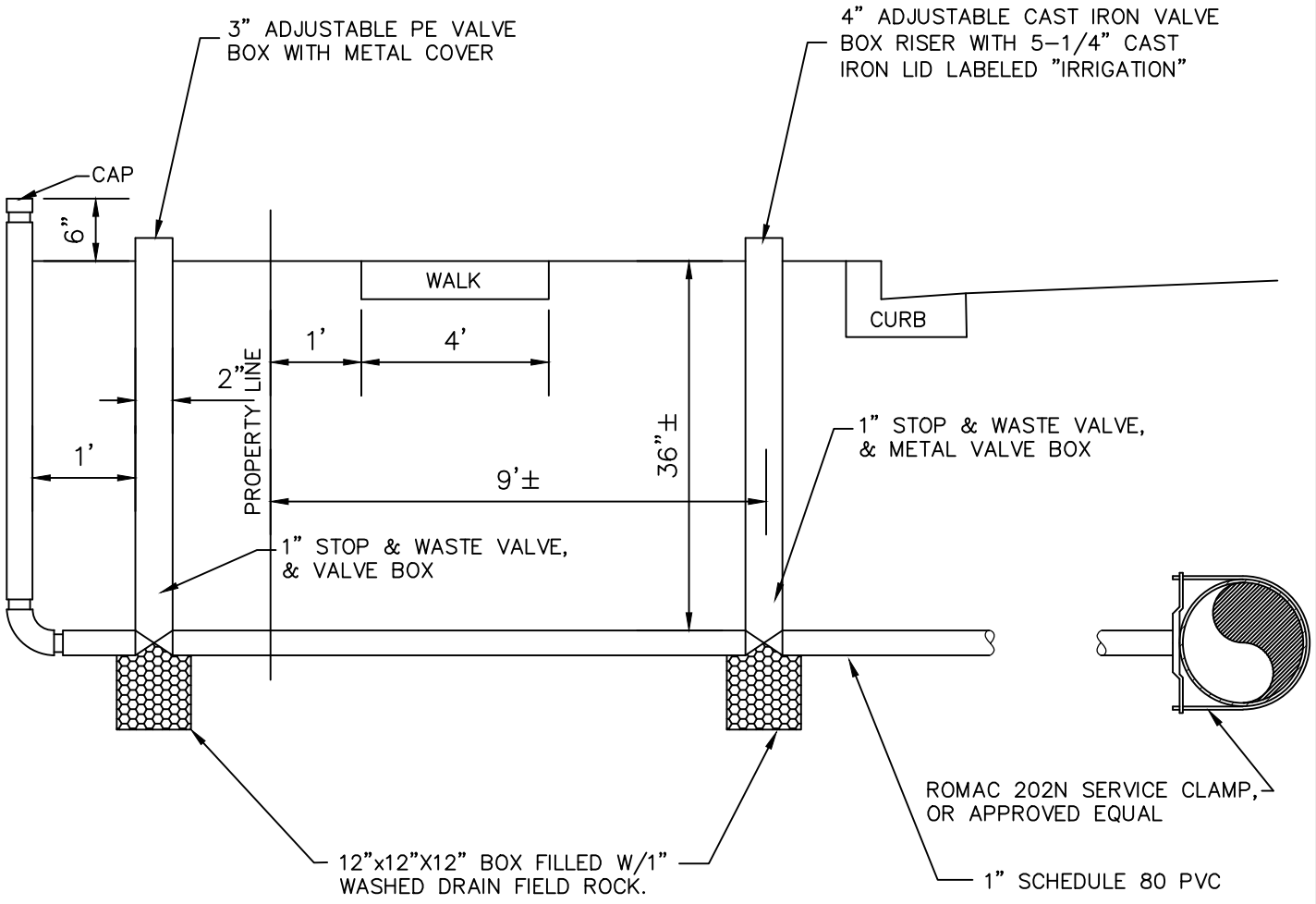

6-56

SECONDARY IRRIGATION SERVICE CONNECTION

REV. 04-19

MATERIALS:
- STRAW BALES BOUND WITH WIRE OR TWINE.
- WOOD OR STEEL STAKES 4' LONG MIN. (2"x2" WOOD, REBAR OR STEEL PICKETS, 2 STAKES PER BALE)

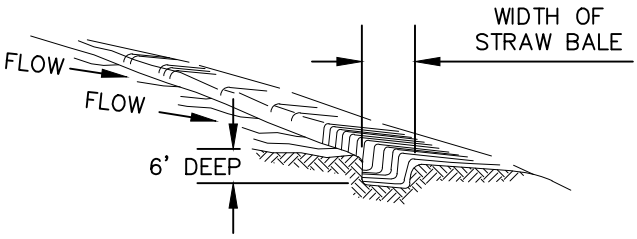

1. DIG A 6"x2' TRENCH. ALIGN TRENCH ALONG CONTOUR, BUT CURVED SLIGHTLY UPHILL SO RUNOFF CANNOT ESCAPE AROUND THE END BALES (SEE (2.) BELOW)

2. PLACE BALES IN TRENCH WITH ENDS TIGHTLY ABUTTED.

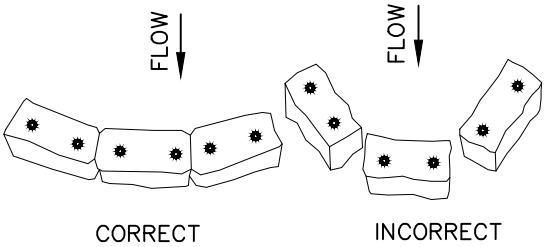

3. ANCHOR EACH BALE WITH 2 STAKES HAMMERED 1-1/2' TO 2' INTO THE GROUND. ANGLE FIRST STAKE IN EACH BALE TOWARD THE PREVIOUSLY LAID BALE.

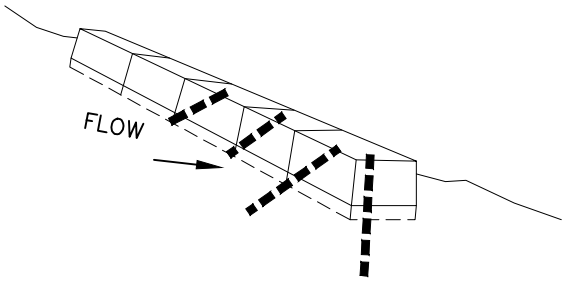

4. WEDGE LOOSE STRAW BETWEEN BALES. BACKFILL AND COMPACT THE EXCAVATED SOIL AGAINST THE UPHILL SIDE OF BARRIER.

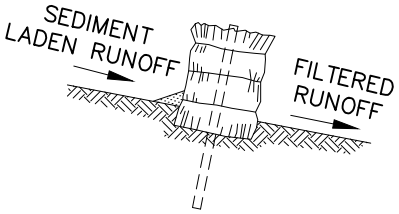

WHEN INSTALLING BALES ON PAVEMENT, PILE GRAVEL OR ROCK BEHIND THE BALES TO HOLD THEM IN PLACE.

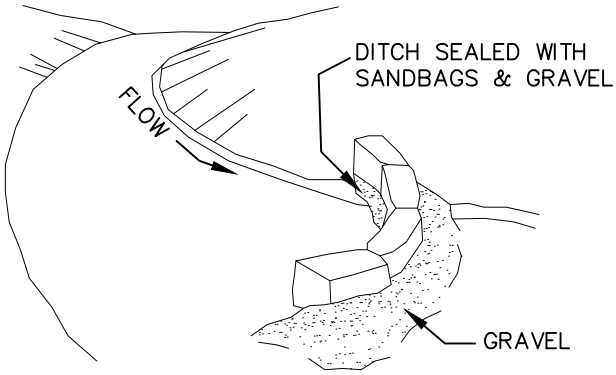

- INSPECT PERIODICALLY AND AFTER EACH STORM. REPLACE DAMAGED BALES; RE-ANCHOR DISPLACED ONES.
- CLEAN OUT SEDIMENT BEFORE IT REACHES THE TOP OF BALES.
- DEPOSIT THE SEDIMENT WHERE IT WILL NOT ENTER A DRAINAGE WAY.

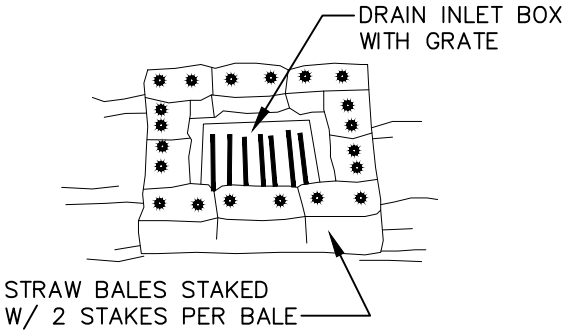

STRAW BALE/DRAIN INLET SEDIMENT FILTER

STRAW BALE INSTALL FOR EROSION CONTROL

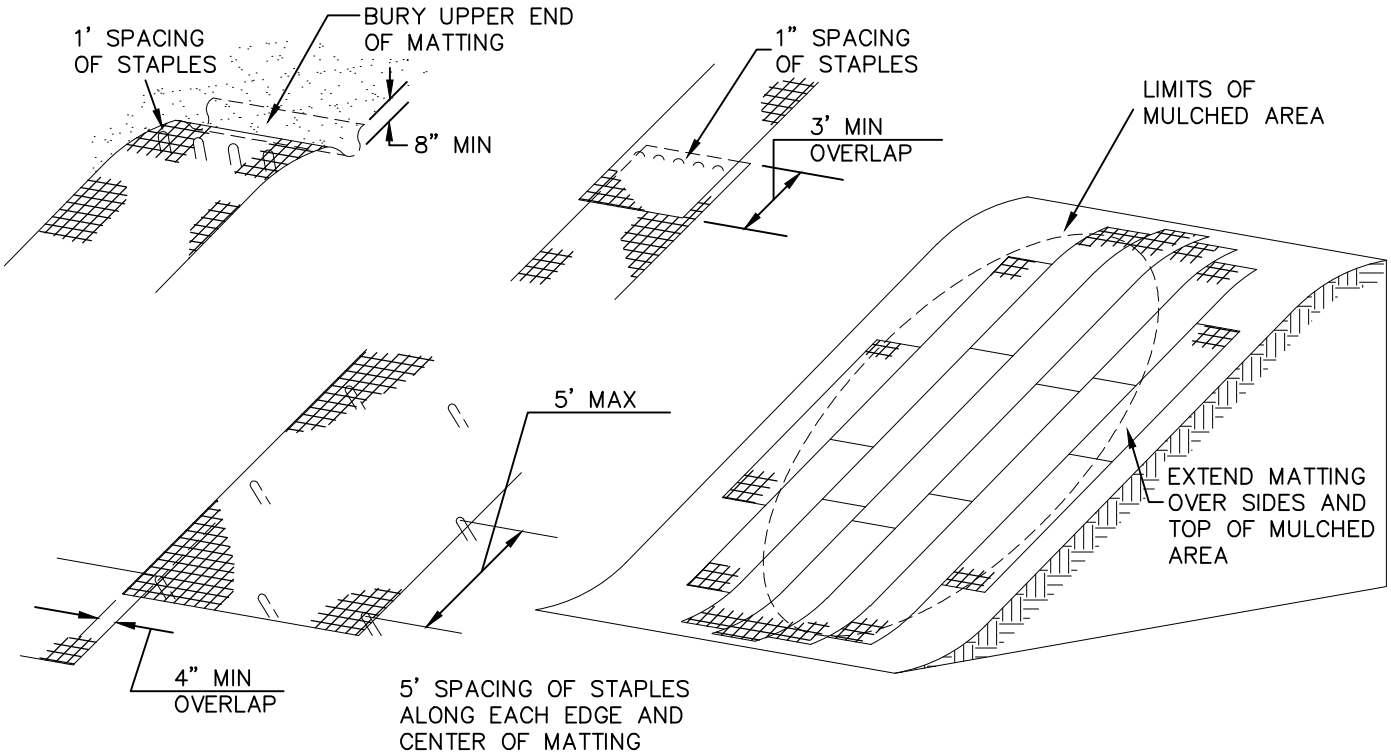

- JUTE MAT SHALL BE CLOTH OF A UNIFORM PLAIN WEAVE OF UNDYED AND UNBLEACHED SINGLE JUTE YARN, 48" IN WIDTH ± 1" AND WEIGHING AN AVERAGE 1.2 POUNDS PER LINEAR YARD OF CLOTH WITH A TOLERANCE OF ± 5%, WITH APPROXIMATELY 78 WARP ENDS PER WIDTH OF CLOTH AND 41 WEFT ENDS PER LINEAR YARD OF CLOTH. THE YARN SHALL BE OF A LOOSELY TWISTED CONSTRUCTION HAVING AN AVERAGE TWIST OF NOT LESS THAN 1.6 TURNS PER INCH AND SHALL NOT VARY IN THICKNESS BY MORE THAN 1/2 OF ITS NORMAL DIAMETER.
- INDIVIDUAL ROLLS SHOULD BE APPLIED UP AND DOWN THE SLOPE, NEVER ALONG THE CONTOUR.
- SIDES OF ROLLS SHALL OVERLAP AT LEAST 4 INCHES, AND ROLLS SHALL HAVE AT LEAST A 3' OVERLAP WHEN AN UPHILL ROLL JOINS TO A DOWNHILL ROLL. THE UPHILL ROLL SHALL OVERLIE THE DOWNHILL ROLL.
- STAPLES SHALL BE MADE OF WIRE, 0.091" IN DIAMETER OR GREATER, "U" SHAPED WITH LEGS AT LEAST 6" IN LENGTH AND A 1" CROWN. LONGER STAPLES ARE REQUIRED IN LOOSE OR SANDY SOILS.
- STAPLES SHALL BE DRIVEN PERPENDICULARLY INTO THE SLOPE FACE, AND SHALL BE SPACED APPROXIMATELY 5' APART DOWN THE SIDES AND CENTER OF THE ROLL. SPACING BETWEEN STAPLES AT THE UPPER END OF A ROLL OR AT THE END OVERLAP OF TWO ROLLS SHALL NOT EXCEED 1'.
- MATTING SHALL BE CONTINUED BEYOND THE EDGE OF THE MULCHED OR SEEDED AREA AT LEAST 1' AT THE SIDES AND 3' AT THE TOP AND BOTTOM OF THE AREA. IF EXISTING VEGETATION OR STRUCTURES MARK THE BOUNDARIES OF THE AREA, THE MATTING SHALL BE CONTINUED INTO THE STABLE VEGETATED AREA OR TO THE EDGE OF THE STRUCTURE.
- THE UPPER END OF THE MATTING AT THE TOP OF THE AREA SHALL BE BURIED IN A TRENCH AT LEAST 8" DEEP.
- THE MATTING SHALL MAKE UNIFORM CONTACT WITH THE SLOPE FACE UNDERNEATH. NO "BRIDGING" OF RILLS OR GULLIES IS ALLOWED.

JUTE MESH INSTALLATION

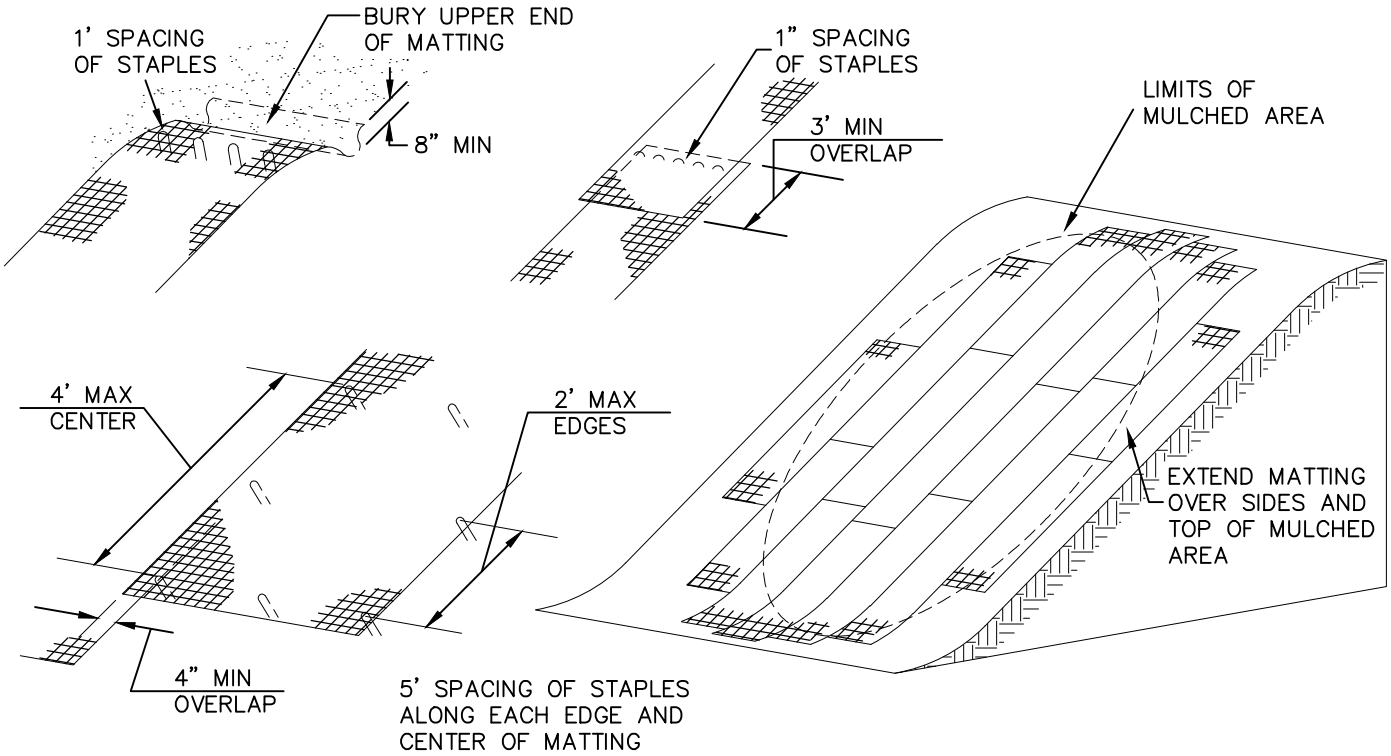

THE SOIL MUST BE REASONABLY SMOOTH. GULLIES AND RILLS MUST BE FILLED AND COMPACTED. ROCKS OR OTHER OBSTRUCTIONS WHICH RISE ABOVE THE LEVEL OF THE SOIL OR MULCH MUST BE REMOVED.

DUE TO THE DIFFICULTY OF PLACING WOOD EXCELSIOR MATTING AND ITS LESS PREDICTABLE RESULTS IN CONTROLLING EROSION, JUTE MATTING IS PREFERRED.

- EXCELSIOR BLANKETS SHALL CONSIST OF MACHINE PRODUCED MATS OR CURLED WOOD EXCELSIOR, 80% OF WHICH HAVE AN 8" OR LONGER FIBER LENGTH. IT SHALL BE OF CONSISTENT THICKNESS WITH THE FIBER EVENLY DISTRIBUTED OVER THE ENTIRE AREA OF THE BLANKET. THE TOP SIDE OF EACH BLANKET SHALL BE COVERED WITH A 3" BY 1" WEAVE OF TWISTED KRAFT PAPER OR BIODEGRADABLE PLASTIC MESH THAT HAS A HIGH WET STRENGTH. BLANKETS SHALL BE FIRE AND SMOLDER RESISTANT AND CONTAIN NO CHEMICAL ADDITIVES. BLANKETS SHALL BE IN 3-FOOT BY 150-FOOT ROLLS OR IN 4-FOOT BY 180-FOOT ROLLS.
- IF THE WOOD EXCELSIOR MAT IS TO BE APPLIED WITHOUT OTHER MULCHES, THE MINIMUM THICKNESS OF MAT SHALL BE 1-1/2".
- IF THE WOOD EXCELSIOR MAT IS TO BE APPLIED OVER OTHER MULCHES, THE MINIMUM THICKNESS SHALL BE 1/2".
- AFTER SITE PREPARATION AND SEEDING (IF ANY), THE ROLLS OF WOOD EXCELSIOR MATTING SHALL BE ROLLED ONTO THE SURFACE FROM THE TOP OF THE SLOPE TO THE BOTTOM OF THE SLOPE, NEVER ALONG THE CONTOUR.
- THE UPPER END OF EACH BLANKET SHALL BE BURIED IN A TRENCH AT LEAST 8" DEEP, AND THE TRENCH SHALL BE BACKFILLED AND TAMPED.
- STAPLES SHALL BE APPLIED AT 2' ON CENTER ALONG THE SIDES OF THE BLANKET AND 4 FEET ON CENTER ALONG THE CENTER OF THE BLANKET.
- BLANKETS PLACED SIDE-TO-SIDE SHALL BE SNUGLY BUTTED TOGETHER TO PREVENT RILLING AND GULLYING ALONG THE JOINT.
- BLANKETS PLACED END-TO-END SHALL BE OVERLAPPED. THE TOP OF THE LOWER BLANKET SHALL BE PLACED IN AN 8" DEEP TRENCH WHICH SHALL THEN BE BACKFILLED AND TAMPED. THE LOWER END OF THE UPPER BLANKET SHALL BE OVERLAPPED ONTO THE LOWER BLANKET, AND STAPLES SHALL BE PLACED THROUGH BOTH BLANKETS.
- STAPLES SHALL BE OF HEAVY GUAGE WIRE, 0.091" IN DIAMETER OR GREATER, WHICH HAVE BEEN BENT INTO A "U" SHAPE, WITH LEGS AT LEAST 8" LONG, AND A 1" CROWN. LONGER STAPLES ARE REQUIRED IN LOOSE OR SANDY SOIL.

EXCELSIOR MAT INSTALLATION